Journal of Environmental Chemical Engineering 9 (2021) 106247

Contents lists available at ScienceDirect

Journal of Environmental Chemical Engineering

journal homepage: www.elsevier.com/locate/jece

Optimizing biological effluent organic matter removal for subsequent micropollutant removal

K. van Gijn [a], Y.L. Chen [a], B. van Oudheusden [a], S. Gong [a], H.A. de Wilt [b], H.H.M. Rijnaarts [a], A.A. M. Langenhoff [a,*]

[a] Department of Environmental Technology, Wageningen University & Research, 6700 AA Wageningen, The Netherlands
[b] Royal Haskoning DHV, 3800 BC Amersfoort, The Netherlands

ARTICLE INFO

Editor: Yunho Lee

Keywords:
micropollutants
effluent organic matter
biofiltration
biological activated carbon
flow speed

ABSTRACT

Wastewater treatment plant effluent is an important point source for micropollutants emissions into the environment. These micropollutants can pose risks for ecosystems and humans; therefore, wastewater treatment plants should be upgraded to improve their micropollutant removal. Micropollutant removal can be improved by implementing tertiary treatment such as ozonation or activated carbon filtration. However, organic matter in the wastewater treatment plant effluent interferes with the micropollutant removal in these tertiary treatments, resulting in high energy demand and costs. To decrease the energy demand of tertiary treatment, biological pre-treatment can be introduced to remove effluent organic matter in an energy efficient manner. This biological pre-treatment was optimized by comparing three types of bioreactors; biological activated carbon, sand filter, and moving bed bioreactor. The reactors were operated at five flow rates (0.25, 0.5, 1, 2 and 4 L/h) in a continuous setup. The biological activated carbon filter achieved higher effluent organic matter removal than the sand filter and moving bed bioreactor (up to 72%, 41%, and 21% respectively). Additionally, effluent organic matter removal was negatively correlated to the flow rate in the biological activated carbon filter and the sand filter. The biological activated carbon filter also achieved average removal of 85% for the 18 analyzed micropollutants, although how long this high micropollutant removal can be sustained is unclear. To conclude, the biological activated carbon filter as pre-treatment can achieve high effluent organic matter removal, which would decreases the energy demand and cost of subsequent treatment for micropollutant removal.

1. Introduction

The occurrence of micropollutants (MPs), such as pharmaceuticals, personal care products, pesticides and industrial chemicals, is a growing global concern [1–3]. MPs occur in fresh and saline water systems at concentrations ranging from ng to μg/L. Despite their low concentrations, toxicological risks of MPs are of concern for three reasons: the vast amount of compounds, synergistic mixture effects, and chronic or long term exposure. The number of chemical compounds used in our society is increasing. For instance, the CAS registry has grown from 100 million in 2015 to over 160 million chemical compounds registered in 2020 [4]. Many of the chemicals that people use end up in sewage, or directly drain into natural waters. Moreover, every MP can be broken down by biological, chemical or physical processes, forming transformation products (TPs) that are sometimes difficult to mineralize into carbon dioxide and water [5–8]. Especially the toxicity of TPs formed during strong oxidative treatment such as ozonation have giving rise to concern [9,10]. Assessing the long term toxicological risk of a complex environmental mixture with a large number MPs and TPs is difficult, because most available toxicological information is related to individual compounds and short term effects [11–14]. Due to the widespread occurrence of MPs and the uncertainties related to their toxicological risks the precautionary principle should be applied to reduce emissions of MPs into the environment [15].

A large portion of MP discharge into the environment occurs at wastewater treatment plants (WWTPs) [16]. Conventional WWTPs remove MPs to a limited extent because these WWTPs were only designed for bulk organic matter (OM) and nutrient removal [17]. MP removal in WWTPs can be improved by implementing oxidation, sorption or filtration based tertiary treatments, for example ozonation, catalyzed UV treatment, activated carbon filtration and membrane filtration. Although these treatment types have proven their

* Corresponding author.
E-mail address: alette.langenhoff@wur.nl (A.A.M. Langenhoff).

https://doi.org/10.1016/j.jece.2021.106247
Received 23 May 2021; Received in revised form 14 August 2021; Accepted 18 August 2021
Available online 20 August 2021

effectiveness to remove MPs, they are associated with high energy and costs; the production of ozone and UV radiation has a high energy demand, activated carbon treatment requires renewal or regeneration of the carbon and membrane filtration is hindered by membrane fouling and the need to treat the concentrate stream [18–21].

The high energy demand and costs of these tertiary treatments results from interference of effluent organic matter (EfOM) with the MP removal. The concentrations of EfOM are three to six orders of magnitude higher than the concentrations of MPs, which means that the largest part of the treatment capacity is not used for the MPs but for the EfOM [22]. This complex group of OM can be quantified as dissolved organic carbon (DOC), chemical oxygen demand (COD) or absorbance at 254 nm (UV254). The OM quantity is frequently used to determine the required ozone or UV dose [23,24], the time an AC filter can run until regeneration [25] and the fouling rate during membrane filtration [26]. Therefore, reducing EfOM concentrations directly improves the efficiency of a tertiary treatment.

Even though EfOM has already passed through a conventional biological treatment, advanced biological treatment using biofilm reactors can further degrade EfOM, possibly because of the higher sludge retention times in biofilm reactors compared to conventional activated sludge systems. Therefore, biofilm reactors can be used as pre-treatment to reduce EfOM concentrations and therefore reduce the energy and cost requirement of ozonation for MP removal. Biofilm reactors can be designed as a bio-filter or as a mixed tank reactor, for example sand filters (SF) and biological activated carbon filters (BAC) or moving bed biofilm reactors (MBBRs) respectively. Filters have an added value that they also remove suspended particles and generally have a higher biofilm area per reactor volume than MBBRs. However, filters need to be backwashed regularly to avoid clogging. On the one hand, MBBRs provide better mixing compared to filters. On the other hand, MBBRs have more turbulent conditions in the reactor, due to air bubbles and collisions between carrier particles, that can affect the biofilm growth. A BAC is a bio-filter with a high specific surface area, that utilizes saturated granular activated carbon (GAC) as base for biofilm growth. It is hypothesized that high local substrate concentrations as a result of sorption and desorption can stimulate biological activity in a BAC filter [27,28]. The main difference between BAC and GAC treatment is that in GAC reactors the activated carbon has to be regenerated or replaced periodically due to saturation of the filter bed and BAC does not have to be regenerated. Regeneration or replacement of the filter bed accounts for the majority of the energy demand associated with GAC treatment [21]. The three types of biofilm reactors have been studied separately in literature, but they have not been studied together in the same conditions.

The high energy demand of tertiary MP removal can be reduced by first removing OM from WWTP effluent in a pre-treatment step. Biofilm reactors have the potential to act as a pre-treatment and remove this EfOM but little is known about their effectiveness as pre-treatment. In our work, the EfOM removal of three different biofilm reactors is studied at lab scale in continuous mode. Additionally, the effect of flow rate on the EfOM removal efficiency was investigated. The results of this study can be used to design and optimize a biological-pre-treatment to reduce the energy requirement of the successive MP removal step and facilitate implementation.

2. Materials and methods

2.1. Inoculum and feed

All three bioreactors were inoculated with a mix of biological active sludges collected at four WWTPs in the Netherlands one year prior to the experiments. These four WWTPs were selected because they treat wastewaters containing complex organic compounds, for example hospital wastewater, industrial wastewater or domestic WWTP effluent (Appendix A).

Effluent of the secondary clarifier from the WWTP in Bennekom (the Netherlands) was used as feed for the three reactors. The EfOM characteristics in the feed were on average: UV254 levels of 0.6 ± 0.02, COD levels of 24 ± 3.4 mg/L and TOC levels of 6.9 ± 1.0 mg/L. Nutrient concentrations in the feed were on average: ammonium levels of <0.02 mg/L (below detection limit), nitrite levels of 0.10 ± 0.15 mg/L, nitrate levels of 9.02 ± 3.9 mg/L and phosphate levels of 0.57 ± 0.18 mg/L. The feed was stored in a 3 m^3 tank kept at 4 °C and continuously stirred with a metal rod. The tank was refilled with fresh dry weather effluent once a month, to avoid fluctuations in EfOM levels due to rain.

The used MPs (a selection of pharmaceuticals, pesticides and an industrial chemical) were chosen due for their occurrence in WWTP effluent. Pharmaceuticals are frequently found in wastewater influents and effluent at concentrations of several hundreds of ng/L to several μg/L [20,29–31]. Pesticides are found less frequently and at lower concentrations than pharmaceuticals (tens to hundreds of ng/L). Despite the lower concentrations, this class of MPs is relevant to include in the current study due to their recalcitrance to advanced treatment (e.g. oxidative technologies) and their ecotoxicological risk [20,34,35]. Therefore, these pesticides can also act as model compounds for more recalcitrant MPs. The industrial chemical benzotriazole is detected in a broad range of concentrations, up to tens or hundreds of μg/L, depending on the presence and type of industry at the wastewater source [31,33]. Furthermore, the selected MPs have a broad range of susceptibilities to conventional and advanced treatments, ranging from 0% to 100% removal. The reactors were fed with feed spiked with a mix of 16 MPs with approximately 2 μg/L: benzotriazole, caffeine, carbamazepine, clarithromycin, chloridazon, desphenyl chloridazon, 2,4-dichlorophenoxyacetic acid (2.4 D), 2,6-dichlorobenzamide (BAM), diclofenac, mecoprop, 4 & 5 methyl benzotriazole, metoprolol, naproxen, propranolol, sulfamethoxazole and trimethoprim (octanol partitioning coefficients and ozone reactivity coefficients of these MPs are presented in Table A2 in appendix A). Spiking was done to ensure the comparability between different measurement days. In order to avoid the presence of solvent of the MP mix (acetonitrile) in the feed, the MP solution was added to a smaller tank of 20 L, the solvent was evaporated under a stream of nitrogen gas, and finally the WWTP effluent was added to dissolve the MPs.

2.2. Reactor setup

The feed was pumped from the feed tank via the 'sampling point 1′ into the pre-aerator where pure oxygen gas was added (Fig. 1). From the pre-aerator, the flow was split in three equal parts and pumped into the bottom of the up flow reactors. All three reactors had a total volume of 1.7 L. The bottom of the BAC filter and the SF consisted of a stabilization layer with gravel and sand (from bottom to top, particles with diameters of: 8–12 mm, 1.0–2.0 mm, and 0.7–1.25 mm). The BAC filter was filled with 1.2 L FILTRASORB® TL830 granular activated carbon (GAC) used for 38,000 bed volumes in a drinking water treatment facility of Evides (Kralingen, the Netherlands). The SF was filled with 1.2 L sand (0.4–0.8 mm diameter) from a drinking water treatment facility of Vitens (De Meern, the Netherlands). The MBBR was filled with 0.85 L Kaldness K1 carriers (Appendix A) and was continuously aerated with pressurized air to keep the bed moving. The outflow of the three reactors was pumped via the 'sampling point 2′ into the sewer (Fig. 1).

2.3. Reactor operation

The three reactors were tested at five different flow rates in a random order (approximately 1, 0.5, 0.25, 2, and 4 L/h) (Table B1 and B2 in Appendix B). Each flow rate was run for two weeks and after this, three of the flow rates were repeated for one week each (0.25, 1, 4 L/h) to test the reproducibility of EfOM removal in the reactors (Table A1 in Appendix A). Samples were taken three times per week for UV254 absorbance, COD and TOC analysis. The top of the SF was washed before the

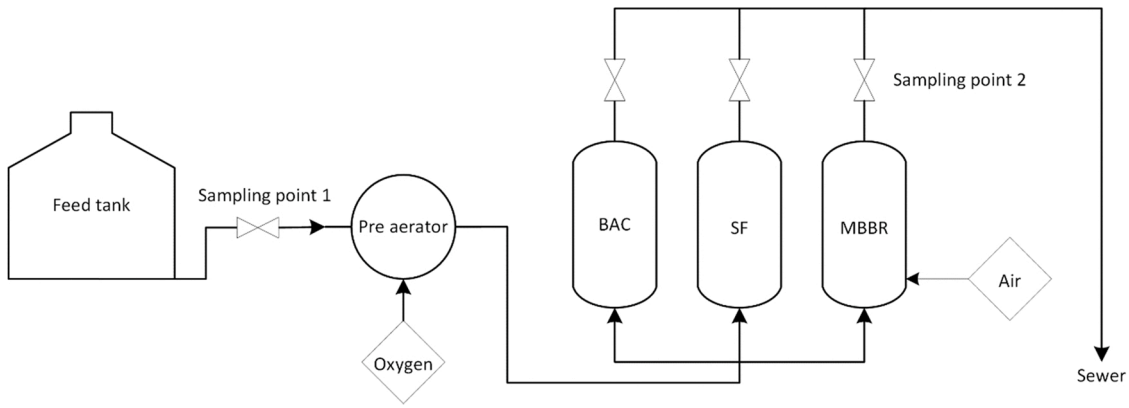

Fig. 1. Schematic representation the three reactors: biological activated carbon (BAC) filter, sand filter (SF) and moving bed bioreactor (MBBR).

experiments, to remove accumulated brown fluffy material. This was not needed for the BAC (Fig. A1 in appendix A). Additional samples were taken for MP analysis at the end of week 1 and week 12 (during operation at 1 L/h). Prior to sampling for MP analysis, the reactors were fed with fresh MP spiked effluent for three hours to homogenization of MP concentrations in the system. MP spiking done in order to ensure the presence of the same MPs at the different sampling times.

2.4. Analytical methods

Three properties of the EfOM were quantified: UV254 absorbance, COD and TOC. UV254 absorbance was analyzed using an Infinite M200 Pro multimode plate reader (Tecan). COD was analyzed with Hach kits (LCK 1414). TOC was analyzed with a non-purgeable organic carbon detection method on a TNM-L TOC analyzer (Shimadzu).

Ammonium was measured using Hach kit LCK 304 and negatively charged nutrients were measured using ion chromatography. The used ion chromatograph was a Dionex ICS-2100 with a Dionex ionpac AS10 column. The mobile phase (KOH in demi water) was ramped from 5 to 20 mM over 10 min at a constant flow speed of 1 mL/min.

Oxygen was measured in the pre-aeration tank and in the three reactors using non-invasive oxygen sensors (Spot SP-Pst3, Presense Precision Sensing) and an oxygen meter (Fibox 4).

The flow rate of each reactor was determined once a week for each reactor by measuring the time needed to fill a 100 mL measurement cylinder.

MPs were analyzed using Ultra High Performance Liquid Chromatography coupled with tandem quadrupole mass spectrometry (3Q UPLC-MS). Chromatographic separation of conjugates was performed on a Waters Acquity UPLC with a phenyl-hexyl column, 1.7 µm, 2.1 × 100 mm. Flow rate 0.3 mL/min with a column temperature of 35°C. The LC mobile phase consisted of solution A (UPLC-MS quality water with 1% formic acid (v/v)) and solution B (UPLC-MS quality acetonitrile with 1% formic acid (v/v)). Compounds were eluted according to the following gradient: 0–0.5 min 0%B; 0.5–13 min linear increased to 80% B; 13–16 min 80%B; 16–17 min linear decreased to 0%B; 17–23 min 0%B. From the conjugate sample, 50 µl was injected (partial loop with needle overfill and load ahead). The MS system switched between positive and negative ion ionization during analysis. The capillary voltage was set to 0.8 kV, the cone voltage was adjusted to 25 V, cone gas 150 L per hour. The source temperature was 150°C and the desolvation temperature was 500°C. The flow of the desolvation gas was 800 L per hour. The LM 1 Resolution was 2.8 and the HM Resolution was 15.0. The Ion Energy 1 was set to 0.0 and the Ion Energy 2–0.6. Data processing was done with MassLynx V4.1 software. The limit of quantification (LOQ) for all 16 MPs was 200 ng/L. R^2 values of the standard curves can be found in Table B4 in Appendix B.

3. Results and discussion

3.1. Effluent organic matter removal in different bioreactors

Three bioreactors were assessed for their OM removal from a real WWTP effluent. The BAC filter achieved reduction in UV254 absorbance and COD of over 60% and reduction in TOC of approximately 40% at a flow rate of 1.2 L/h (Fig. 2). TOC is commonly used as guiding parameter in tertiary treatment, while UV254 absorbance and COD can give more insight into the complexity of the EfOM [36,37]. Specifically for ozone treatment, UV254 absorbance and COD have also been suggested as parameters to determine the required dose [23,37,38]. The high reduction of these three parameters in the BAC filter would directly improve the efficiency of subsequent MP removal treatment and results in significant reduction of energy demand and costs.

Reduction in UV254 absorbance, COD and TOC in the BAC filter was more than two times higher than in the SF and the MBBR (Fig. 2). A possible explanation for the higher EfOM removal in the BAC filter is a synergy between sorption and biodegradation, where sorption can increase the local concentration and influx of substrate (EfOM in this case) into the cells and thereby stimulate the biodegradation [27]. This hypothesis is supported by the long use times BAC, a sum of 42,000 bed volumes in drinking water treatment and WWTP effluent treatment combined. The MBBR showed little EfOM removal and did not achieve reduction in UV254 absorbance, COD or TOC removal above 10%. The reason for this low removal most likely is the lower surface area of the MBBR and the turbulent conditions in this continuously mixed reactor. To illustrate, the MBBR had two and nine times lower external surface area than the BAC filter and the SF respectively (Appendix A). The

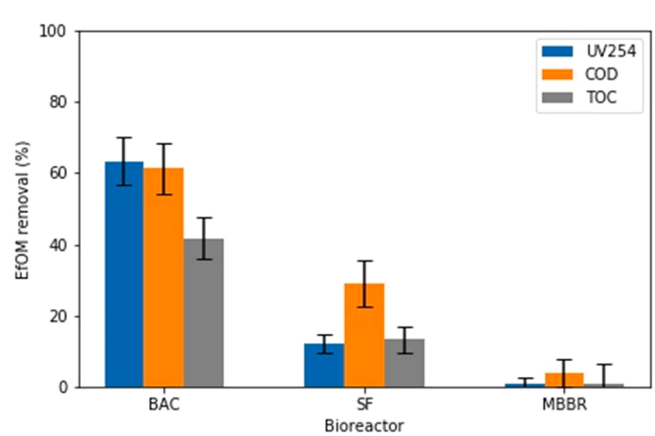

Fig. 2. Reduction of UV254 absorbance, COD and TOC in the biological activated carbon filter (BAC), sand filter (SF) and moving bed bioreactor (MBBR) at a flow rate of 1.2 L/h. Averages and standard deviations represent 9 datapoints.

turbulent conditions, for instance shear stress caused by air bubbles and collisions of the carriers in the MBBR, likely resulted in higher stress on the biofilm and higher decay of the biomass [39,40].

The BAC filter and SF reactors removed more COD than TOC (Fig. 2). The reduction in COD/TOC ratio indicates that incomplete mineralization occurred. This means that saturated and less complex compounds with a high COD are transformed into more oxidized compounds with a lower COD, without lowering the TOC. The BAC filter achieved higher reduction of UV254 absorbance than reduction of TOC, which indicates a selective removal of aromatic organic matter compared to non-aromatic constituents. Whether this is an effect of non-biological removal by sorption or of biological removal processes by the biofilm is yet unclear. Compounds that absorb at 254 nm contain aromatic groups are often considered as bio-recalcitrant [41], in this experiment these seem to be more reactive than the more saturated organic structures that are removed to a lower extent. This indicates removal by sorption or by a specialized biological community that can target compounds that are often considered as bio-recalcitrant. The high reduction in UV254 absorbance and COD is especially beneficial for a pre-treatment before ozonation, since these two parameters are related to ozone demand [37,42].

3.2. Effluent organic matter removal at different flow rates

EfOM removal increased with increasing empty bed contact time (EBCT) for the BAC filter and the SF (Fig. 3 A and B). In the BAC filter, reduction of UV254 absorbance and COD increased from approximately 40% at an EBCT of 0.3 h up to 70% at an EBCT of 4.9 h. This increase in EfOM removal indicates that contact time of the water is a limiting factor in the pre-treatment. A logarithmic regression fitted the reduction of all three parameters better than a linear regression (Table B3 in Appendix B), which indicates that at higher EBCTs, other parameters than the contact time start to become limiting. Logarithmic correlation coefficients between EfOM removal and flow rate ranged from 0.52 to 0.82 for all three EfOM characteristics in the BAC filter and the SF (Table B3). These high correlation coefficients indicate that flow rate is an important design parameter to control EfOM removal in the BAC filter and the SF.

Observed removal in the BAC filter and SF in this research are in line with results from similar studies. Reungoat et al. [43] compared a BAC and a SF for MP and DOC removal from WWTP effluent and found DOC removals of 34–47% in their BAC and DOC removals from 11% to 22% in their SF at EBCTs from 0.5 to 2 h. Reungoat et al. [43] did not find a correlation between DOC removal and EBCT, such as observed in our experiments, however they hypothesized that this lack of correlation was caused by oxygen limitation in the BAC filter. Additionally, Pipe-Martin [44] did find a clear correlation between DOC removal and EBCT in a BAC and a SF for EBCTs ranging from 0.5 to 2.67 h. At higher EBCT, micro-organisms have more time to degrade the EfOM, resulting in higher removal, which explains the observed trend in our results [45, 46].

Average EfOM removal in the MBBR was below 10% at all tested flow rates (Fig. 3). This is in line with the results of [47], who measured DOC removal in a MBBR treating conventional WWTP effluent.

Results of our study indicate that BAC is a promising technology to remove OM from WWTP effluent. Lower OM concentrations result in a reduction of energy demand and costs for subsequent treatment such as ozonation, AC filtration and membrane filtration [23,48–50]. Additionally, flow rate is a key parameter to control the OM removal in biological pre-treatment, lower flow rates result in higher EBCT and higher EfOM removal. However, lower flow rates require larger reactor volumes resulting in higher capital and operational costs. For implementation in practise, a trade-off between the capital and operational costs has to be made. The regressions made in Fig. 3 can be used for this purpose.

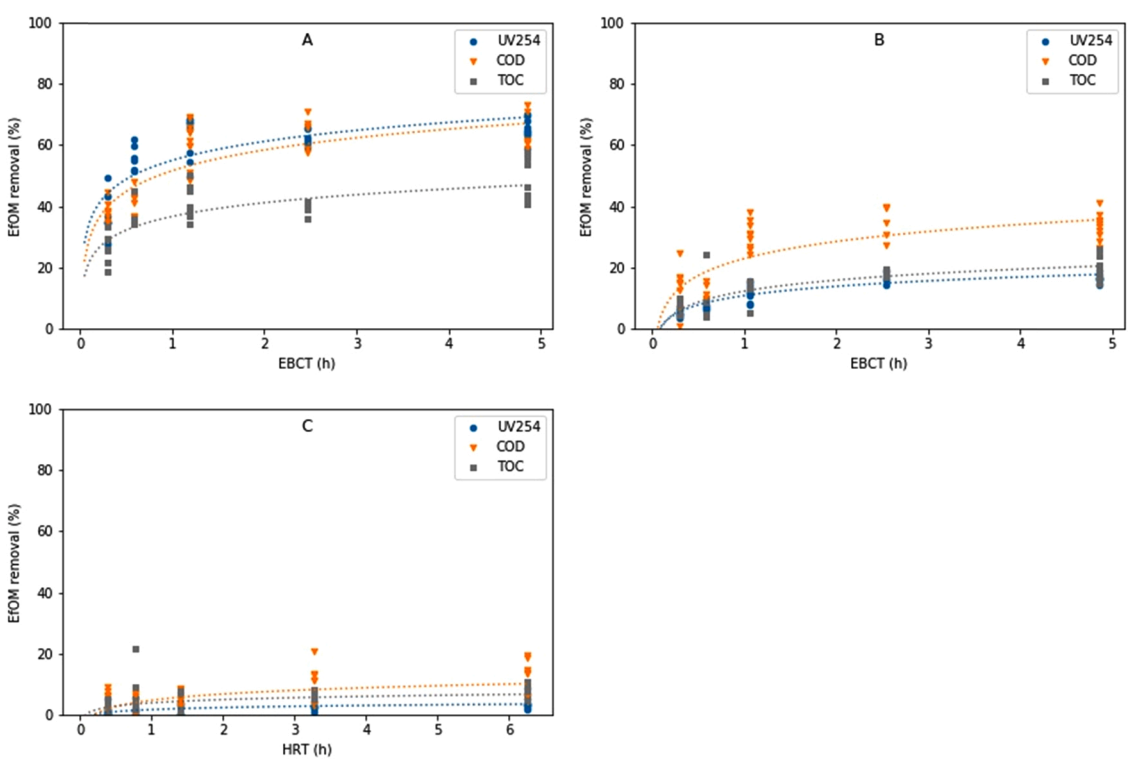

Fig. 3. Removal of effluent organic matter in the biological activated carbon filter (A), sand filter (B) and moving bed bioreactor (C) at all tested flow rates. Three characteristics of effluent organic matter were quantified: UV absorbance at 254 nm (UV254), chemical oxygen demand (COD) and total organic carbon (TOC). Dotted lines represent a logarithmic regression model.

3.3. Micropollutant removal in different bioreactors

The BAC filter removed on average 92% of all MPs, which is three times higher than the MP removal in the SF and the MBBR (Fig. 4). The sorption capacity of the BAC was expected to be saturated since it had already treated 38,000 bed volumes of surface water in a drinking water treatment facility and 6000 bed volumes of WWTP effluent in the current setup. Still, the high removal of bio-recalcitrant MPs (for example, Carbamazepine, 4 & 5 methyl benzotriazole and diclofenac [32,51,52]) indicates that sorption is still taken place in the BAC. The reason for this could be bio regeneration of the sorption capacity of the AC, which would free sorption sites for the bio-recalcitrant MPs [53]. In this case it would be expected that more hydrophilic MPs (with low K_{OW}, Table A2 in Appendix A) show the lowest removals, though that is not the case. Alternatively, the high removal of bio-recalcitrant MPs could also be explained by optimized biological conditions in the BAC or by catalyzed chemical oxidation on the BAC surface [27,54]. This raises the question whether the observed MP removal in the BAC filter can be sustained for prolonged operation times or whether the AC would saturate for MPs at some point.

3.4. Implications for application

Three biological reactors were compared for their suitability as pre-treatment before tertiary MP removal treatment. The BAC reactor showed the best performance and reduced UV254 absorbance, COD and TOC by up to 70%. Whether the high observed removal of the BAC filter continues without the need to replace the GAC is crucial for the cost effectiveness of the reactor. Continuation of the observed removal is determined by the type of removal processes taking place in the reactor. Sorption dominated removal would mean saturation is reached over time and therefore removal capacity decreases, while biological dominated removal would not reduce over time.

The BAC filter shows indications that both sorption and biological processes play a role in the observed removal. The used GAC was previously used in a drinking water treatment plant, fed with surface water for 38,000 bed volumes (DOC 2–3 mg/L). Thereafter, the GAC was used in this study with WWTP effluent for approximately 6000 bed volumes. A breakthrough of DOC was not observed with this GAC, while Ma et al. [55] found a breakthrough of DOC after 25,000 bed volumes of surface water treatment (with an DOC concentrations between 3 and 6 mg/L) and Fundneider et al. [25] found a breakthrough of DOC after approximately 3000 bed volumes of WWTP effluent treatment. In addition, the BAC filter consumed on average 42% times more oxygen than the SF (Fig. B1 in Appendix B), which also indicates a high biological activity in the BAC. Alternatively, this high oxygen consumption can be related to chemical oxidation occurring on the BAC surface. The surface of AC can catalyze the formation of oxidative radicals that chemically react with EfOM [54,56,57]. The BAC achieved over 90% removal for 14 out of 18 measured MPs, some of which are considered bio-recalcitrant in other studies. This indicates the influence of sorption and/or chemical based processes for the observed MP removal. It is possible that biological processes are responsible for the observed OM removal while the MP removals caused by sorption. Benstoem et al. [22] and Sundaram et al. [58] found that sorption of MPs onto GAC can continue after saturation of DOC has already been reached, which could mean that the observed OM removals in this study are based on biological. Overall, extended use times show the potential of the BAC filter without regeneration, while the processes responsible for the observed OM and MP removal remain under debate.

A biological OM-removal treatment is foreseen to enable a significant reduction in costs (investment and operation), energy consumption and CO_2-footprint for subsequent MP-removal technologies such as oxidation, sorption and filtration. These technologies are strongly affected by the OM content, higher OM (UV254, COD or TOC) resulting in higher oxidant dosage, higher consumption of AC and fouling and reduced fluxes of membranes. Oxidant dosage and AC consumption are the main the operational costs and a significant part of the total costs of oxidation and adsorption technologies and the largest part of the energy use and CO_2 footprint, approximately 40%, 80% and 80% for the example of ozonation [59,60]. Therefore, a biological pre-treatment removing up to 70% of the EfOM could reduce the operational costs of a subsequent

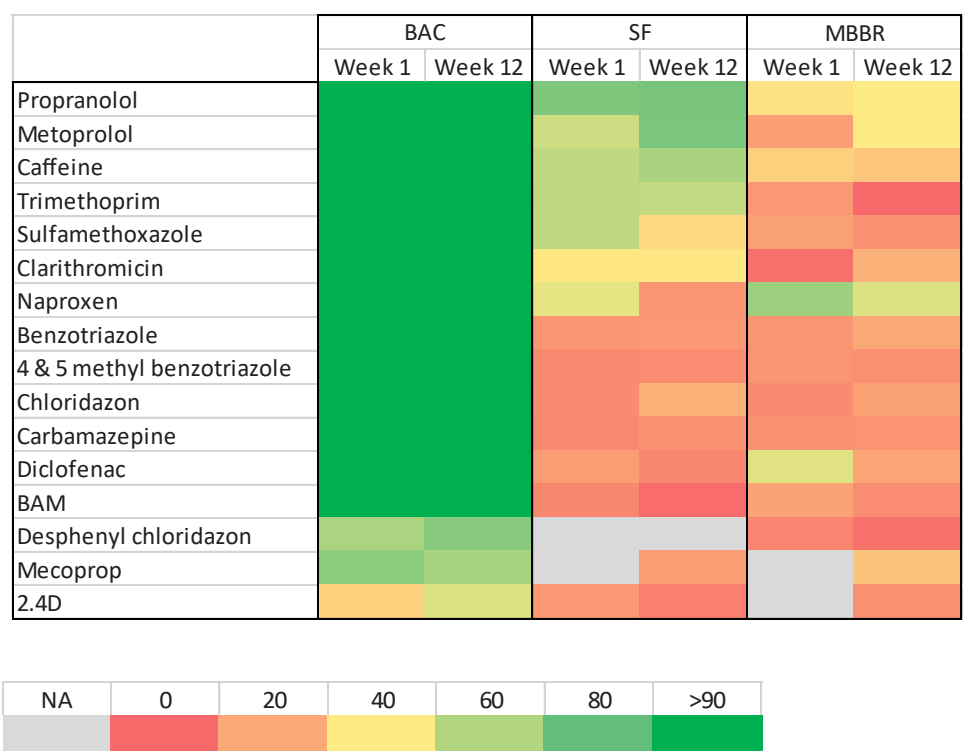

Fig. 4. Heatmap of micropollutant removal in the biological activated carbon (BAC) filter, sand filter (SF) and moving bed bioreactor (MBBR).

treatment with 30% and reduce the energy use and CO_2 footprint with 50%.

A treatment train that combines different types of removal processes would be considered most promising for the removal of a broad range of MPs [61]. We suggest a combination of a BAC (biological and sorption processes) and ozone (advanced oxidation processes). Due to the sustained high removal in the BAC after extended use times, a combination of a BAC and a low dose ozone treatment provides a robust post-treatment for MP removal with the following advantages. The BAC filter removes EfOM in the WWTP effluent, which reduces the energy and costs of the ozonation. The double barrier removes both compounds that be removed with ozone, but not with BAC and vice versa (e.g. BAM, 2.4 D and Benzotriazole (Table A2 in Appendix A)), even after saturation of MPs would occur in the BAC. Therefore, operational costs in a BAC – ozone combination are lower compared to single GAC or ozone treatment where the GAC has to be replaced more frequently or where higher ozone doses are required. Ozonation with a BAC pre-treatment can remove a broad range of MPs at relatively low energy input and costs.

4. Conclusions

In both the BAC filter and the SF, an increasing empty bed contact time resulted in an increasing effluent organic matter removal. Flow rate controls the removal, therefore flow rate is an important parameter for the design of the biological pre-treatment reactor.

Implementing a BAC filter before a tertiary micropollutant removal treatment results in approximately 30% reduction in the total implementation costs of the tertiary micropollutant removal treatment. The BAC filter achieved high reduction in UV254 absorbance, COD and TOC (up to 70%) at the lowest flow rate of 0.25 L/h. The BAC showed higher effluent organic matter removal than the SF and the MBBR at all tested flow rates (0.25–4 L/h). Micropollutant removal in the BAC filter was approximately four times higher than in the other two reactors and showed an average removal of 85% for 18 analyzed micropollutants.

Indications for both biological processes and other processes, such as sorption or advanced oxidation, were found in the BAC filter. Operation time in the current study was longer than activated carbon breakthrough times in other studies, which shows the potential for long use time without the need to replace the filter bed. Combined with an additional advanced treatment, the BAC filter can improve the effectivity and efficiency of micropollutant removal from wastewater treatment plant effluent.

CRediT authorship contribution statement

Koen van Gijn: Conceptualization, Methodology, Investigation, Formal analysis, Writing – original draft, Visualization, Project administration. **Yulan Chen:** Methodology, investigation. Formal analysis, visualization. **Bas van Oudheusden:** Conceptualization, Methodology, investigation. **Sheng Gong:** Conceptualization, Methodology, investigation. **Arnoud de Wilt:** Conceptualization, Resources, Visualization, Writing – review & editing, Supervision, Funding acquisition. **Huub Rijnaarts:** Conceptualization, Resources, Writing – review & editing, Supervision. **Alette Langenhoff:** Conceptualization, Methodology, Visualization, Resources, Writing - review & editing, Supervision, Funding acquisition.

Declaration of Competing Interest

The authors declare that they have no known competing financial interests or personal relationships that could have appeared to influence the work reported in this paper.

Acknowledgements

This work was funded by the Dutch “topsector water” and Royal HaskoningDHV. We would like to thank Andrea Aldas-Vargas, Laura Piai and Thomas Wagner for proof reading the manuscript.

Appendix A. Supporting information

Supplementary data associated with this article can be found in the online version at doi:10.1016/j.jece.2021.106247.

References

[1] E. Archer, B. Petrie, B. Kasprzyk-Hordern, G.M. Wolfaardt, The fate of pharmaceuticals and personal care products (PPCPs), endocrine disrupting contaminants (EDCs), metabolites and illicit drugs in a WWTW and environmental waters, Chemosphere 174 (2017) 437–446, https://doi.org/10.1016/j.chemosphere.2017.01.101.

[2] M.O. Barbosa, N.F.F. Moreira, A.R. Ribeiro, M.F.R. Pereira, A.M.T. Silva, Occurrence and removal of organic micropollutants: an overview of the watch list of EU Decision 2015/495, Water Res. 94 (2016) 257–279, https://doi.org/10.1016/J.WATRES.2016.02.047.

[3] D. Montes-Grajales, M. Fennix-Agudelo, W. Miranda-Castro, Occurrence of personal care products as emerging chemicals of concern in water resources: a review, Sci. Total Environ. 595 (2017) 601–614, https://doi.org/10.1016/j.scitotenv.2017.03.286.

[4] CAS - Registry, Chemical Substances - CAS REGISTRY, Chem. Abstr. Serv. - A Div. Am. Chamical Soc. (2020). http://support.cas.org/content/chemical-substances. (Accessed 27 March 2020).

[5] K. Kümmerer, The presence of pharmaceuticals in the environment due to human use – present knowledge and future challenges, J. Environ. Manag. 90 (2009) 2354–2366, https://doi.org/10.1016/j.jenvman.2009.01.023.

[6] P. Verlicchi, M. Al Aukidy, E. Zambello, Occurrence of pharmaceutical compounds in urban wastewater: removal, mass load and environmental risk after a secondary treatment—a review, Sci. Total Environ. 429 (2012) 123–155, https://doi.org/10.1016/j.scitotenv.2012.04.028.

[7] S. Adil, B. Maryam, E.J. Kim, N. Dulova, Individual and simultaneous degradation of sulfamethoxazole and trimethoprim by ozone, ozone/hydrogen peroxide and ozone/persulfate processes: a comparative study, Environ. Res. 189 (2020), 109889, https://doi.org/10.1016/j.envres.2020.109889.

[8] P. Falås, K.S. Jewell, N. Hermes, A. Wick, T.A. Ternes, A. Joss, J.L. Nielsen, Transformation, CO_2 formation and uptake of four organic micropollutants by carrier-attached microorganisms, Water Res. 141 (2018) 405–416, https://doi.org/10.1016/j.watres.2018.03.040.

[9] S. Lim, C.S. McArdell, U. von Gunten, Reactions of aliphatic amines with ozone: kinetics and mechanisms, Water Res. 157 (2019) 514–528, https://doi.org/10.1016/J.WATRES.2019.03.089.

[10] B. Eva-Maria, H. Oliver, K. Schmidt Carsten, S. Marco, S. Beat, K. Meike, K. Martina, G. Stefan, H. Henner, Approach for analytical characterization and toxicological assessment of ozonation products in drinking water on the example of acesulfame, Water Res. (2019), https://doi.org/10.1016/J.WATRES.2019.01.018.

[11] K.A. Heys, R.F. Shore, M.G. Pereira, K.C. Jones, F.L. Martin, Risk assessment of environmental mixture effects, RSC Adv. 6 (2016) 47844–47857, https://doi.org/10.1039/C6RA05406D.

[12] M. Kuzmanović, A. Ginebreda, M. Petrović, D. Barceló, Risk assessment based prioritization of 200 organic micropollutants in 4 Iberian rivers, Sci. Total Environ. 503–504 (2015) 289–299, https://doi.org/10.1016/j.scitotenv.2014.06.056.

[13] F.F. Sodré, P.M. Dutra, V.P. Dos Santos, Pharmaceuticals and personal care products as emerging micropollutants in Brazilian surface waters: a preliminary snapshot on environmental contamination and risks, Eclética Quím. J. 43 (2018) 22, https://doi.org/10.26850/1678-4618eqj.v43.1SI.2018.p22-34.

[14] M.I. Vasquez, A. Lambrianides, M. Schneider, K. Kümmerer, D. Fatta-Kassinos, Environmental side effects of pharmaceutical cocktails: what we know and what we should know, J. Hazard. Mater. 279 (2014) 169–189, https://doi.org/10.1016/j.jhazmat.2014.06.069.

[15] F. Metz, K. Ingold, Politics of the precautionary principle: assessing actors' preferences in water protection policy, Policy Sci. 50 (2017) 721–743, https://doi.org/10.1007/s11077-017-9295-z.

[16] Y. Luo, W. Guo, H.H. Ngo, L.D. Nghiem, F.I. Hai, J. Zhang, S. Liang, X.C. Wang, A review on the occurrence of micropollutants in the aquatic environment and their fate and removal during wastewater treatment, Sci. Total Environ. 473–474 (2014) 619–641, https://doi.org/10.1016/j.scitotenv.2013.12.065.

[17] P. Falås, A. Wick, S. Castronovo, J. Habermacher, T.A. Ternes, A. Joss, Tracing the limits of organic micropollutant removal in biological wastewater treatment, Water Res. 95 (2016) 240–249, https://doi.org/10.1016/j.watres.2016.03.009.

[18] M. Bourgin, B. Beck, M. Boehler, E. Borowska, J. Fleiner, E. Salhi, R. Teichler, U. von Gunten, H. Siegrist, C.S. McArdell, Evaluation of a full-scale wastewater treatment plant upgraded with ozonation and biological post-treatments: abatement of micropollutants, formation of transformation products and oxidation by-products, Water Res. 129 (2018) 486–498, https://doi.org/10.1016/j.watres.2017.10.036.

[19] A. Joss, H. Siegrist, T.A. Ternes, Are we about to upgrade wastewater treatment for removing organic micropollutants? Water Sci. Technol. 57 (2008) 251–255, https://doi.org/10.2166/wst.2008.825.

[20] J. Margot, C. Kienle, A. Magnet, M. Weil, L. Rossi, L.F. de Alencastro, C. Abegglen, D. Thonney, N. Chèvre, M. Schärer, D.A. Barry, Treatment of micropollutants in

municipal wastewater: ozone or powdered activated carbon? Sci. Total Environ. 461–462 (2013) 480–498, https://doi.org/10.1016/j.scitotenv.2013.05.034.
[21] D. Mousel, L. Palmowski, J. Pinnekamp, Energy demand for elimination of organic micropollutants in municipal wastewater treatment plants, Sci. Total Environ. 575 (2017) 1139–1149, https://doi.org/10.1016/j.scitotenv.2016.09.197.
[22] F. Benstoem, A. Nahrstedt, M. Boehler, G. Knopp, D. Montag, H. Siegrist, J. Pinnekamp, Performance of granular activated carbon to remove micropollutants from municipal wastewater—a meta-analysis of pilot- and large-scale studies, Chemosphere 185 (2017) 105–118, https://doi.org/10.1016/j.chemosphere.2017.06.118.
[23] F. Nilsson, M. Ekblad, J. la Cour Jansen, K. Jönsson, Removal of pharmaceuticals with ozone at 10 Swedish wastewater treatment plants, Water Pract. Technol. 12 (2017) 871–881, https://doi.org/10.2166/wpt.2017.087.
[24] D. Awfa, M. Ateia, M. Fujii, C. Yoshimura, Photocatalytic degradation of organic micropollutants: inhibition mechanisms by different fractions of natural organic matter, Water Res. 174 (2020), 115643, https://doi.org/10.1016/J.WATRES.2020.115643.
[25] T. Fundneider, V. Acevedo Alonso, A. Wick, D. Albrecht, S. Lackner, Implications of biological activated carbon filters for micropollutant removal in wastewater treatment, Water Res. 189 (2021), 116588, https://doi.org/10.1016/j.watres.2020.116588.
[26] D. Jermann, W. Pronk, M. Boller, A.I. Schäfer, The role of NOM fouling for the retention of estradiol and ibuprofen during ultrafiltration, J. Membr. Sci. 329 (2009) 75–84, https://doi.org/10.1016/j.memsci.2008.12.016.
[27] M. Herzberg, C.G. Dosoretz, S. Tarre, M. Green, Patchy biofilm coverage can explain the potential advantage of BGAC reactors, Environ. Sci. Technol. 37 (2003) 4274–4280, https://doi.org/10.1021/es0210852.
[28] J. Shi, X. Zhao, R.F. Hickey, T.C. Voice, Role of adsorption in granular activated carbon-fluidized bed reactors, Water Environ. Res. 67 (1995) 302–309, https://doi.org/10.2175/106143095×131510.
[29] J. Wilkinson, P.S. Hooda, J. Barker, S. Barton, J. Swinden, Occurrence, fate and transformation of emerging contaminants in water: an overarching review of the field, Environ. Pollut. 231 (2017) 954–970, https://doi.org/10.1016/J.ENVPOL.2017.08.032.
[30] Q. Aemig, A. Hélias, D. Patureau, Impact assessment of a large panel of organic and inorganic micropollutants released by wastewater treatment plants at the scale of France, Water Res. 188 (2021), 116524, https://doi.org/10.1016/j.watres.2020.116524.
[31] J. Hollender, S.G. Zimmermann, S. Koepke, M. Krauss, C.S. Mcardell, C. Ort, H. Singer, U. Von Gunten, H. Siegrist, Elimination of organic micropollutants in a municipal wastewater treatment plant upgraded with a full-scale post-ozonation followed by sand filtration, Environ. Sci. Technol. 43 (2009) 7862–7869, https://doi.org/10.1021/es9014629.
[32] A. Joss, S. Zabczynski, A. Göbel, B. Hoffmann, D. Löffler, C.S. McArdell, T. A. Ternes, A. Thomsen, H. Siegrist, Biological degradation of pharmaceuticals in municipal wastewater treatment: proposing a classification scheme, Water Res. 40 (2006) 1686–1696, https://doi.org/10.1016/j.watres.2006.02.014.
[33] Y.S. Liu, G.G. Ying, A. Shareef, R.S. Kookana, Occurrence and removal of benzotriazoles and ultraviolet filters in a municipal wastewater treatment plant, Environ. Pollut. 165 (2012) 225–232, https://doi.org/10.1016/J.ENVPOL.2011.10.009.
[34] R. Broséus, S. Vincent, K. Aboulfadl, A. Daneshvar, S. Sauvé, B. Barbeau, M. Prévost, Ozone oxidation of pharmaceuticals, endocrine disruptors and pesticides during drinking water treatment, Water Res. 43 (2009) 4707–4717, https://doi.org/10.1016/J.WATRES.2009.07.031.
[35] M.E. DeLorenzo, G.I. Scott, P.E. Ross, Toxicity of pesticides to aquatic microorganisms: a review, Environ. Toxicol. Chem. 20 (2001) 84–98, https://doi.org/10.1002/ETC.5620200108.
[36] F.J. Rodríguez, P. Schlenger, M. García-Valverde, Monitoring changes in the structure and properties of humic substances following ozonation using UV-Vis, FTIR and ^{1}H NMR techniques, Sci. Total Environ. 541 (2016) 623–637, https://doi.org/10.1016/j.scitotenv.2015.09.127.
[37] M. Ekblad, P. Falås, H. El-Taliawy, F. Nilsson, K. Bester, M. Hagman, M. Cimbritz, Is dissolved COD a suitable design parameter for ozone oxidation of organic micropollutants in wastewater? Sci. Total Environ. 658 (2018) 449–456, https://doi.org/10.1016/j.scitotenv.2018.12.085.
[38] Y. Lee, U. von Gunten, Quantitative structure-activity relationships (QSARs) for the transformation of organic micropollutants during oxidative water treatment, Water Res. 46 (2012) 6177–6195, https://doi.org/10.1016/j.watres.2012.06.006.
[39] A. Barwal, R. Chaudhary, To study the performance of biocarriers in moving bed biofilm reactor (MBBR) technology and kinetics of biofilm for retrofitting the existing aerobic treatment systems: a review, Rev. Environ. Sci. Biotechnol. 13 (2014) 285–299, https://doi.org/10.1007/s11157-014-9333-7.
[40] X. Xu, G. Wang, L. Zhou, H. Yu, F. Yang, Start-up of a full-scale SNAD-MBBR process for treating sludge digester liquor, Chem. Eng. J. 343 (2018) 477–483, https://doi.org/10.1016/j.cej.2018.03.032.
[41] S. Gonzales, A. Peña, F.L. Rosario-Ortiz, Examining the role of effluent organic matter components on the decomposition of ozone and formation of hydroxyl radicals in wastewater, Ozone Sci. Eng. 34 (2012) 42–48, https://doi.org/10.1080/01919512.2011.637387.
[42] M. Stapf, U. Miehe, M. Jekel, Application of online UV absorption measurements for ozone process control in secondary effluent with variable nitrite concentration, Water Res. 104 (2016) 111–118, https://doi.org/10.1016/j.watres.2016.08.010.
[43] J. Reungoat, B.I. Escher, M. Macova, F.X. Argaud, W. Gernjak, J. Keller, Ozonation and biological activated carbon filtration of wastewater treatment plant effluents, Water Res. 46 (2012) 863–872, https://doi.org/10.1016/J.WATRES.2011.11.064.
[44] C. Pipe-Martin, Dissolved organic carbon removal by biological treatment, in: D. Prats Rico, C.A. Brebbio, Y. Vilacampa Esteve (Eds.), Water Pollution, WIT Press, Southampton, UK, 2008, pp. 445–452, https://doi.org/10.2495/WP080431.
[45] T.A. Barr, J.M. Taylor, S.J.B. Duff, Effect of HRT, SRT and temperature on the performance of activated sludge reactors treating bleached kraft mill effluent, Water Res. 30 (1996) 799–810, https://doi.org/10.1016/0043-1354(95)00218-9.
[46] D. Ghosh, B. Gopal, Effect of hydraulic retention time on the treatment of secondary effluent in a subsurface flow constructed wetland, Ecol. Eng. 36 (2010) 1044–1051, https://doi.org/10.1016/j.ecoleng.2010.04.017.
[47] K. Tang, G.T.H. Ooi, K. Litty, K. Sundmark, K.M.S. Kaarsholm, C. Sund, C. Kragelund, M. Christensson, K. Bester, H.R. Andersen, Removal of pharmaceuticals in conventionally treated wastewater by a polishing moving bed biofilm reactor (MBBR) with intermittent feeding, Bioresour. Technol. 236 (2017) 77–86, https://doi.org/10.1016/j.biortech.2017.03.159.
[48] J. Altmann, L. Massa, A. Sperlich, R. Gnirss, M. Jekel, UV254 absorbance as real-time monitoring and control parameter for micropollutant removal in advanced wastewater treatment with powdered activated carbon, Water Res. 94 (2016) 240–245, https://doi.org/10.1016/j.watres.2016.03.001.
[49] B.K. Pramanik, F.A. Roddick, L. Fan, A comparative study of biological activated carbon, granular activated carbon and coagulation feed pre-treatment for improving microfiltration performance in wastewater reclamation, J. Membr. Sci. 475 (2015) 147–155, https://doi.org/10.1016/J.MEMSCI.2014.10.019.
[50] C. Bahr, J. Schumacher, M. Ernst, F. Luck, B. Heinzmann, M. Jekel, SUVA as control parameter for the effective ozonation of organic pollutants in secondary effluent, Water Sci. Technol. 55 (2007) 267–274, https://doi.org/10.2166/wst.2007.418.
[51] P. Falås, P. Longrée, J. La Cour Jansen, H. Siegrist, J. Hollender, A. Joss, Micropollutant removal by attached and suspended growth in a hybrid biofilm-activated sludge process, Water Res. 47 (2013) 4498–4506, https://doi.org/10.1016/j.watres.2013.05.010.
[52] M. Pomiès, J.M. Choubert, C. Wisniewski, M. Coquery, Modelling of micropollutant removal in biological wastewater treatments: a review, Sci. Total Environ. 443 (2013) 733–748, https://doi.org/10.1016/j.scitotenv.2012.11.037.
[53] L. Piai, M. Blokland, A. van der Wal, A. Langenhoff, Biodegradation and adsorption of micropollutants by biological activated carbon from a drinking water production plant, J. Hazard. Mater. 388 (2020), 122028, https://doi.org/10.1016/j.jhazmat.2020.122028.
[54] L. Nielsen, M.J. Biggs, W. Skinner, T.J. Bandosz, The effects of activated carbon surface features on the reactive adsorption of carbamazepine and sulfamethoxazole, Carbon N. Y. 80 (2014) 419–432, https://doi.org/10.1016/j.carbon.2014.08.081.
[55] B. Ma, W.A. Arnold, R.M. Hozalski, The relative roles of sorption and biodegradation in the removal of contaminants of emerging concern (CECs) in GAC-sand biofilters, Water Res. 146 (2018) 67–76, https://doi.org/10.1016/j.watres.2018.09.023.
[56] B. Stöhr, H.P. Boehm, R. Schlögl, Enhancement of the catalytic activity of activated carbons in oxidation reactions by thermal treatment with ammonia or hydrogen cyanide and observation of a superoxide species as a possible intermediate, Carbon N. Y. 29 (1991) 707–720, https://doi.org/10.1016/0008-6223(91)90006-5.
[57] E. Ahumada, H. Lizama, F. Orellana, C. Suárez, A. Huidobro, A. Sepúlveda-Escribano, F. Rodríguez-Reinoso, Catalytic oxidation of Fe(II) by activated carbon in the presence of oxygen. Effect of the surface oxidation degree on the catalytic activity, Carbon N. Y. 40 (2002) 2827–2834, https://doi.org/10.1016/S0008-6223(02)00197-5.
[58] V. Sundaram, K. Pagilla, T. Guarin, L. Li, R. Marfil-Vega, Z. Bukhari, Extended field investigations of ozone-biofiltration advanced water treatment for potable reuse, Water Res. 172 (2020), 115513, https://doi.org/10.1016/J.WATRES.2020.115513.
[59] B. Mundy, B. Kuhnel, G. Hunter, R. Jarnis, D. Funk, S. Walker, N. Burns, J. Drago, W. Nezgod, J. Huang, K. Rakness, S. Jasim, R. Joost, R. Kim, J. Muri, J. Nattress, M. Oneby, A. Sosebee, C. Thompson, M. Walsh, C. Schulz, A review of ozone systems costs for municipal applications. Report by the Municipal Committee–IOA Pan American Group, Ozone Sci. Eng. 40 (2018) 266–274, https://doi.org/10.1080/01919512.2018.1467187.
[60] M. Mulder, D. Antakyali, S. Ante, Costs of Removal of Municipal General Cost Estimates for the Netherlands of Effluents of Wastewater Treatment Plants Final version emoval of Micropollutants from Municipal Wastewater Treatment P for the Netherlands based on Implemented Full S of Wastewate, 2015. moz-extension://2d99f19b-143c-4a49-aad0–1f3dee356e17/enhanced-reader.html?openApp&pdf=https%3A%2F%2Fwww.mirabellamulder.nl%2Fwp-content%2Fuploads%2F2016%2F10%2F09032015-TAPES.pdf.
[61] C. Grandclément, I. Seyssiecq, A. Piram, P. Wong-Wah-Chung, G. Vanot, N. Tiliacos, N. Roche, P. Doumenq, From the conventional biological wastewater treatment to hybrid processes, the evaluation of organic micropollutant removal: a review, Water Res. 111 (2017) 297–317, https://doi.org/10.1016/J.WATRES.2017.01.005.