Resource management in a 'De Marke' dairy farming system

H.F.M. Aarts

CENTRALE LANDBOUWCATALOGUS
0000 0795 8214

Promotor: Dr.Ir. H. van Keulen, hoogleraar bij de Leerstoelgroep Plantaardige Produktiesystemen, Wageningen Universiteit

Co-promotor: Dr.Ir. J.A.C. Meijs, Praktijkonderzoek Veehouderij, Lelystad

NN08201, 2307.

Resource management in a 'De Marke' dairy farming system

Het benutten van grondstoffen op een 'De Marke' melkveebedrijf

H.F.M. Aarts

Proefschrift
ter verkrijging van de graad van doctor
op gezag van de rector magnificus van Wageningen Universiteit,
dr. C.M. Karssen,
in het openbaar te verdedigen
op vrijdag 9 juni 2000
des namiddags te 16.00 uur
in de Aula

ISN 976060

CIP-GEGEVENS KONINKLIJKE BIBLIOTHEEK, DEN HAAG

Aarts, H.F.M.

Resource management in a 'De Marke' dairy farming system/H.F.M. Aarts

PhD Thesis Wageningen University. -With ref.- With introduction, discussion and summary in Dutch.
Subject headings: dairy farming/ environment/ farming systems research.
ISBN 90-5808-217-2
Also published in the series 'De Marke' Reports, no. 26.

BIBLIOTHEEK
LANDBOUWUNIVERSITEIT
WAGENINGEN

Layout: H.M. Kleinjan-Meijering
Cover design: D.R. Verkerke

Abstract

Aarts, H.F.M., 2000. Resource management in a 'De Marke' dairy farming system. PhD Thesis, Wageningen University, The Netherlands, 222 pages.

Sandy soils in the Netherlands are mainly used for dairy farming. As a result of intensification, valued functions of sandy regions now are threatened by high emissions of nitrogen (N) and phosphorus (P) and by increased water consumption by forage crops. Dairy farms could probably meet environmental standards by expanding farm size, to reduce milk production intensity per hectare. However, land is very expensive and therefore extensive farming probably will not be sustainable from an economic point of view. Moreover, a societal demand exists for alternative use of available land, like expanding nature reserves. Export of slurry, to increase farm output of nutrients, is also expensive and may lead to environmental problems elsewhere. Improved utilisation efficiency of fertilisers, feeds and water is proposed as a strategy to realise environmental targets in an economically attractive way. Experimental results of the prototype system 'De Marke', obtained in the period 1992-1998, indicate that an average intensive commercial farm can halve inputs of fertilisers and feeds at least, without the need to reduce milk production per hectare or to export slurry. Besides, water consumption of crops can be reduced by 13%, leading to an increase in annual groundwater recharge by 570 m^3 ha^{-1}. Nitrate concentration in the upper groundwater decreased from 200 to 50 mg l^{-1}. Until so far, changes in soil fertility did not lead to serious agricultural problems but costs of milk production increased by 5%. However, additional costs probably can be compensated if the extra groundwater is 'harvested' by water companies, because of higher cost of purification of surface water. In 1999, the examined strategy of improved resource management was implemented on 17 commercial farms, representing the full range of conditions for dairy farming in the Netherlands.

Keywords:

resources, nitrogen, N, nitrate, ammonia, phosphorus, P, dairy farming, systems research, environment, sandy soils, groundwater, leaching

Vur d'oonz en d'allie

Voorwoord

In 1987 vonden vier mensen elkaar op het moment dat de tijd rijp was voor hun revolutionair idee. Kern daarvan was de overtuiging dat melkveebedrijven in een maatschappelijk isolement zouden raken als de bedrijfsvoering niet zou worden aangepast aan wensen met betrekking tot de groene ruimte, met schone lucht en schoon water als basis. Aanpassen zou mogelijk moeten zijn door het slim benutten van bestaande, maar nauwelijks toegankelijke kennis. Naast onderzoek zouden overheden en melkveehouders een actieve rol moeten spelen bij de uitwerking van die benadering *['Participatief onderzoek?', vraagt gij mij. 'Goed zo!']*. Dat zou moeten gebeuren op een proefbedrijf met een onafhankelijke positie, en met overleg als sturende factor *['Een poldermodel?', vermoedt gij. 'Juist!']*. Dat plan veroorzaakte heftige reacties. Een deel van de gevestigde orde, met name binnen beleid en onderzoek, gaf tegengas. Het boek 'Het Mestmoeras', van Frits Bloemendaal, verhaalt daarvan. Het gevolg was dat het idee beter werd uitgewerkt en de initiatiefnemers nog sterker overtuigd raakten van de noodzaak om het in praktijk te brengen. Het bewijs daarvoor werd immers, in hun ogen, dagelijks geleverd. Later constateerde het Amsterdamse Adviesbureau Van de Bunt, in opdracht van de overheid, dat 'het persoonlijk engagement bijzonder' was, 'personen en persoonlijk commitment de driving forces' waren en dat 'de kracht waarmee de initiatiefnemers zijn opgetreden het project tot stand heeft doen komen en beschermd' *['Een heftige tijd.', peinst gij. 'Ach, wat heet'.]*.

Het proefbedrijf 'De Marke' is er dus gekomen dankzij Bart Edel, Edo Biewinga en Hein Korevaar. Ook mensen als Herman van Keulen, Berend Jan Warmelink en Jan Gebbink zijn zeker in die beginfase van onschatbare waarde gebleken. Later, toen de stofwolken enigszins waren opgetrokken, hebben ook Richard Donker, Jacques Meijs, Anton Meijer, Carel de Vries, Gerjan Hilhorst, Frits van der Schans, Gerjo Koskamp, Nico Middelkoop, Toon van der Putten, Barbara Habekotté, Mirjam Hack, Zwier van der Vegte, André Kemperman, Paul Galama en vele anderen zich in of nabij het projectteam bewezen. Betrokkenheid en teamgeest bleken overdraagbaar. Het laatste stuk van het oorspronkelijk idee, een verbreding door een schil van praktijkbedrijven rond het proefbedrijf, is met het project 'Koeien&Kansen' vorig jaar gerealiseerd. Voor akkerbouw, tuinbouw en bollen is intussen een vergelijkbaar project gestart *['Voorwaarts.', meent gij. 'Dat klopt.']*.

De promovendus dankt de vele mensen waarmee de klus geklaard mocht worden. En hij dankt ook degenen die, om wat voor redenen dan ook, toen niet mee konden of wilden. Door hen werd het levendiger en uiteindelijk ook beter *['Is het bovendien niet zo, vriend, dat ge voor koren meer waardering krijgt als ge ook kaf kent?', oppert gij. 'Denkelijk.']*. Dank natuurlijk ook aan Francien, Ricus en Rien voor hun begrip. Sommige dingen moesten even wijken. Tot slot hulde aan Jaap Schröder, die me net dat duwtje gaf om aan een proefschrift te beginnen, in plaats van aan een historische roman. Een zwieper daarvan was niet meer te voorkomen. U las de gedachtenwisseling met één van de hoofdfiguren. Die pleitte al in 1908 voor een weloverwogen gebruik van meststoffen, zat midden in de praktijk en zou zich vermoedelijk prima thuis hebben gevoeld in dit spektakelstuk *['Ge bedoelt mij, pastoor Roes?', vraagt gij. 'Mogelijk, doch leest!']*.

Frans Aarts

NN08201, 2307

Stellingen

Behorende bij het proefschrift:
Resource management in a 'De Marke' dairy farming system

I. Melkveehouders houden in de regel te weinig rekening met de bemestende waarde van dierlijke mest. Daardoor ligt de kunstmestgift gemiddeld ver boven het economische optimum.

II. Het stikstofoverschot van de meeste melkveebedrijven op lichte zandgrond zal in 2003 gehalveerd moeten zijn. Een kundig veehouder is daartoe in staat zonder extra mest af te voeren of grond aan te kopen.

III. De stelling dat de MINAS-verliesnorm voor gras op lichte zandgrond (140 kg N ha^{-1}) meer dan het dubbele hoort te zijn van die van maïs (60 kg N ha^{-1}) is wetenschappelijk niet te verdedigen en kan leiden tot verspilling van water.

IV. Een mineralenbalans biedt slechts beperkt zicht op de mogelijkheden om het management van een bedrijf te verbeteren. Een kringloop biedt veel betere aanknopingspunten en zou daarom periodiek voor de meest voorkomende bedrijfstypen opgesteld moeten worden.

V. De begrippen 'ruwvoer' en 'krachtvoer' hebben hun betekenis goeddeels verloren. Ze kunnen vervangen worden door 'autochtoon voer' en 'allochtoon voer'.

VI. 'De Marke' is opnieuw een begrip, maar nu met een hoofdletter.

VII. MINAS is een bijproduct van project 'De Marke'.

VIII. Het fokbeleid, gericht op hoge melkproducties, leidt ertoe dat de belevingswaarde van volwassen dieren afneemt. Bij voortgezet beleid verdient het overweging overdag alleen jongvee te weiden.

IX. Goed wetenschappelijk onderzoek kan beleidsrelevant zijn (Brinkhorst & Pronk, maart 2000).

X. De bewering van Bavaria (op haar flesetiketten) dat Lieshout in Holland ligt, is verder van de waarheid dan de bewering dat Brabant in Vlaanderen ligt, en Bavaria dus Belgisch bier brouwt.

XI. Stoeptegels als fietspad zijn schokkend.

XII. Het Marianium, in 1649 noodgedwongen door Deurne aan Venray uitgeleend, dient nu onverwijld te worden teruggebracht. Als (oud) inwoner van Venray zou bibliothecaris Els Geurts-Jeuken clementie kunnen tonen bij het manen van (oud) inwoners van Deurne.

XIII. Niet weder doen is 't beste berouw (Pastoor Roes, Deurne).

XIV. Wie wetenschap als kunst ziet, nummert en signeert zijn proefschrift.

Frans Aarts
Wageningen, 9 juni 2000

Table of contents / Inhoud

1	Inleiding	1
	Introduction	13
2	Dairy farming systems based on efficient nutrient management	23
3	Phosphorus (P) management in the 'De Marke' dairy farming system	45
4	Nitrogen (N) management in the 'De Marke' dairy farming system	67
5	Managing dairy farming systems for groundwater conservation in the sandy regions of the Netherlands	87
6	Efficient resource management in dairy farming on sandy soil	115
7	Limits to intensity of milk production in sandy areas in the Netherlands	139
8	Discussion	161
	Discussie	174
	Summary	187
	Samenvatting	195
	Curriculum vitae	217
	Rapporten 'De Marke'	219
	Foto's	222
	Photographs	222

Hoe maken we dien mageren zandgrond vet? Wel zegt gij, door mesten. Goed zoo! En waarmee? Wel met stalmest, zegt gij. Goed zoo!

Pastoor H.W. Roes, 1908. Bemesting op zandgrond. Boerenbond Deurne

Inleiding - Introduction

Inleiding

Dit proefschrift is het resultaat van 12,5 jaar onderzoek naar mogelijkheden om de melkveehouderij te laten voldoen aan maatschappelijke wensen. Het onderzoek is uitgevoerd binnen het project 'De Marke', waarvoor het Centrum voor Landbouw en Milieu (CLM, Utrecht), het Praktijkonderzoek Veehouderij (PV, Lelystad) en Plant Research International (voorheen Instituut voor Agrobiologisch en Bodemvruchtbaarheidsonderzoek, Wageningen) samen verantwoordelijk zijn. Achtergrond, opzet en resultaten van het project zijn vastgelegd in 24 'De Marke'-rapporten. Het proefschrift is vooral op die rapporten gebaseerd. In deze inleiding wordt stilgestaan bij het belang van de melkveehouderij voor Nederland en bij de problemen van en kansen voor deze sector. Daarna worden doel en aanpak van project 'De Marke' kort beschreven. Tot slot wordt, als leeswijzer, een korte beschrijving gegeven van de inhoud van de overige hoofdstukken.

Betekenis melkveehouderij

Kort voor de oorlog werd de melkveehouderij in ons land nog beschouwd als 'het grootste rad in het economisch leven' (Obbink, 1935). Hoewel de melkproductie in Nederland sindsdien meer dan verdubbelde nam de economische betekenis van de melkveehouderij sterk af. In 1993 werd ongeveer 7% van de toegevoegde waarde in ons land voortgebracht door de landbouw, inclusief het toeleverend en verwerkend bedrijfsleven, waarvan éénderde door de melkveehouderij. Jaarlijks wordt voor 7 miljard gulden aan zuivel geëxporteerd, waarvan éénderde naar landen buiten de Europese Unie. Dat is iets meer dan 2,5% van de totale Nederlandse export (LNV, 1999; Stolwijk & Veenendaal, 1995). Ongeveer 45.000 mensen werken op de 32.000 melkveebedrijven. Bovendien zijn veel mensen werkzaam bij loonbedrijven, veevoederbedrijven en in de verwerkende industrie. Van de cultuurgrond in Nederland wordt 65% gebruikt voor de teelt van gras (1.032.000 hectare) of maïs (239.000 hectare), voornamelijk ten behoeve van de melkveehouderij. Daardoor is de melkveehouderij landschappelijk beeldbepalend en van grote invloed op de belevingswaarde van ons platteland.
De landbouw, en in het bijzonder de melkveehouderij, heeft een sterk maatschappelijk draagvlak. In de Europese Unie gelden minimumprijzen voor

een aantal landbouwproducten, waaronder boter en melkpoeder. Als de prijs daar beneden dreigt te komen koopt de Unie producten op. Bovendien wordt subsidie gegeven bij de export van zuivelproducten naar landen buiten de Unie. Die subsidie is ongeveer 40 cent op een melkprijs van 75 cent per kg die de veehouder bij aflevering ontvangt (LNV, 1999). Om de oplopende kosten voor de EU-begroting te beteugelen zijn in 1984 productiebeperkende maatregelen ingevoerd, de zogenaamde melkquotering. Bovendien is later overeengekomen, in het kader van GATT (General Agreement on Tariffs and Trade), dat de subsidie op export zal worden afgebouwd en dat vrijere marktprijzen gaan gelden voor landbouwproducten. Nederland is één van de 124 landen die de overeenkomst hebben ondertekend.

Om inkomensdaling te compenseren zullen de boeren in de Europese Unie financiële steun krijgen, waarvan de hoogte afhankelijk wordt gesteld van de kwaliteit van het beheer van de groene ruimte. Dat is in lijn met andere besluiten die op Europees niveau zijn genomen ten aanzien van de milieukwaliteit. Één daarvan, de 'nitraatrichtlijn', bepaalt dat het grond- en oppervlaktewater in de Europese Unie maximaal 50 mg nitraat per liter mag bevatten. Elk land is verplicht de gemaakte afspraken te vertalen naar praktisch handelen op bedrijfsniveau. Nederland heeft dit gedaan via de mestwetgeving. Die verplicht boeren de aan- en afvoer van stikstof (N) en fosfor (P) in meststoffen, voer en landbouwproducten te registreren en daarvan aangifte te doen (MINAS: MINeralen Aangifte Systeem). Aanvoer met depositie en binding van N door vlinderbloemigen worden buiten beschouwing gelaten. Aan verliezen, de verschillen tussen de aan- en afvoer, zijn maxima gesteld (verliesnormen). Bij overschrijding daarvan volgen boetes.

Eén en ander komt voort uit het toegenomen besef dat de groene ruimte niet enkel leverancier is van traditionele landbouwproducten, als melk en graan, maar de samenleving ook van producten als drinkwater en recreatie-mogelijkheden moet voorzien. Bovendien is de groene ruimte belangrijk voor het voortbestaan van allerlei organismen en voor het behoud van cultuurhistorische waarden. Zeker in een dichtbevolkt land als Nederland biedt dat kansen, omdat ook deze producten in principe te vermarkten zijn. In de nabije toekomst is multifunctioneel gebruik van grond vanzelfsprekend (Aarts & De Kuijer, 1997). Kosten, gemaakt om het milieu te ontzien, zullen dan moeten worden terugverdiend met extra, maatschappelijk gewenste, producten die enkel in een schone omgeving kunnen worden voortgebracht.

Het functioneren van de melkveehouderij spoort nu onvoldoende met de maatschappelijke wensen ten aanzien van de groene ruimte. De milieukwaliteit verslechtert vooral door een inefficiënte benutting van meststoffen, voer en water. Het gebruik daarvan is vooral sterk toegenomen door dalende kosten van deze productiemiddelen ten opzichte van de productiefactoren grond en arbeid, maar ook door technologische ontwikkelingen als resultaat van onderzoek. De problemen doen zich vooral voor in de zandgebieden in het oosten, midden en zuiden van Nederland. De bedrijven zijn daar intensief, zelfs naar Nederlandse maatstaven. Om veel voer te kunnen produceren worden gewassen zwaar bemest en wordt op ruime schaal kunstmatige beregening toegepast. In het midden van de jaren tachtig bleek slechts 14% van de N die een melkveebedrijf op zandgrond binnen kwam (als voer, kunstmest of neerslag; in totaal 568 kg ha^{-1}) te worden afgevoerd met melk of vee. Omdat ophoping in de bodem op wat langere termijn geen rol van betekenis speelt, mag worden aangenomen dat de rest (486 kg ha^{-1}) goeddeels in het milieu verdween, ondermeer door vervluchtiging als ammoniak en uitspoeling als nitraat (Aarts & Van Gorp, 1989). Van de aangevoerde P werd 33% benut. De rest (32 kg ha^{-1}) hoopte op in de bodem tot die verzadigd raakte. De sterke toename van de grondwateronttrekking voor beregening droeg bij aan verdroging en leidde daardoor tot schade aan kwelafhankelijke natuurgebieden. Bovendien is beregening één van de oorzaken van het tekort aan grondwater voor drinkwaterbereiding. Als aanvulling moet rivierwater worden gebruikt, waardoor de kostprijs met ongeveer fl 1,-- per m^3 wordt verhoogd. Bovendien drinkt de consument liever bronwater dan water uit Rijn of Maas.
Om de schade aan het milieu te beperken zal de veehouder a) moeten extensiveren, door grond aan te kopen of quotum te verkopen, b) dierlijke mest moeten afvoeren of c) meststoffen, voer en water veel efficiënter moeten gaan benutten. De eerste twee opties zijn onder Nederlandse omstandigheden economisch weinig aantrekkelijk. Het project 'De Marke' heeft zich daarom gericht op de laatste optie, het verbeteren van de benutting van grondstoffen.

Project 'De Marke'

De basis voor het project 'De Marke' is gelegd in het midden van de jaren tachtig. Toen drong het besef door dat de melkveehouderij ernstige milieuproblemen veroorzaakte, met name door het weglekken van nitraat en

fosfaat en de vervluchtiging van ammoniak. In het rapport 'Melkveehouderij en Milieu' (Aarts *e.a.*, 1988) werd door CLM, PR (later opgegaan in Praktijkonderzoek Veehouderij) en CABO (later opgegaan via AB in Plant Research International) een strategie voorgesteld om het kernprobleem, de gebrekkige benutting van mineralen (inclusief N), op bedrijfsniveau aan te pakken. Het rapport adviseerde om een proefbedrijf te stichten, waar verbetering van de benutting in elke schakel van de cyclus 'vee > mest > grond > gewas > voer > vee' zou worden nagestreefd, met een verantwoorde milieukwaliteit bij zo laag mogelijk kosten als resultaat.
Het voorstel voor een dergelijk proefbedrijf sloeg aan bij praktijk, onderzoek en beleid al moesten daarvoor weerstanden worden overwonnen (Bloemendaal, 1995). Sommigen waren van mening dat het beter was de problemen onbesproken te laten ('De melkveehouderij is schoon en natuurlijk; aan dat imago mag niet worden getornd!'), anderen hadden twijfels bij de wetenschappelijke betekenis en de invloed op het imago van het onderzoek ('Van zo'n bedrijf kun je toch geen nieuwe wetenschappelijke inzichten verwachten.'). Die reacties weerspiegelen het tijdsbeeld van toen: een Haags Ministerie van Landbouw met nog weinig oog voor het bredere maatschappelijk belang en een onderzoekcultuur met waardering in eigen kring als hoogste ideaal. Er waren ook mensen, waaronder melkveehouders, die vanaf het begin overtuigd waren van de noodzaak van dergelijk onderzoek. Een positieve houding was er van de kant van het Ministerie van Volksgezondheid, Ruimtelijke Ordening en Milieubeheer (VROM). De toenmalige minister liep stage op het melkveebedrijf van Bart Edel, één van de leden van het team dat het proefbedrijf vorm probeerde te geven. De periode 1988-1992 bleek nodig om alle conceptuele, emotionele, organisatorische en financiële hobbels te nemen, een plek voor een proefbedrijf te vinden en de bouw te realiseren. Vanaf voorjaar 1992 functioneert proefbedrijf 'De Marke' als een volvaardig experimenteel systeem.

Doelen

De centrale doelstelling van het project is het ontwikkelen en demonstreren van een bedrijfssysteem voor grondgebonden melkproductie, dat voldoet aan stringente milieunormen ten aanzien van N, P en systeemvreemde stoffen (zoals bestrijdingsmiddelen). Er wordt gestreefd naar een zo rendabel mogelijke bedrijfsvoering en naar behoud van bodemvruchtbaarheid. Er mag geen

mest worden afgevoerd en de opfok van jongvee hoort op het bedrijf zelf te gebeuren. Nevendoelstellingen zijn gericht op het verbeteren van arbeidsomstandigheden en dierlijk welzijn, het verminderen van de emissie van broeikasgassen, het verminderen van het gebruik van energie en grondstoffen (inclusief grondwater) en de verhoging van natuurwaarden.
De gedetailleerde onderbouwing en uitwerking van de doelen zijn te vinden in het bedrijfs- en onderzoeksplan van het proefbedrijf (Biewinga *e.a.*, 1992). De normen en streefwaarden van de doelen zijn gebaseerd op het eerste Nationaal Milieubeleidsplan (VROM, 1989). Aangezien veel normen nog niet op bedrijfsniveau waren geformuleerd, was voor het ontwerpen van 'De Marke' een vertaling nodig. De belangrijkste milieudoelen met hun normen zijn samengevat in Tabel 1. Aan deze normen moet in elk geval worden voldaan.
De normen zijn veel scherper dan de verliesnormen die de overheid in de mestwetgeving heeft vastgelegd. De door de overheid gestelde normen zijn compromissen tussen wensen op het gebied van milieukwaliteit en verwachte landbouwkundige problemen bij het realiseren van die normen (Dekker & Van Leeuwen, 1998). Volgens de mestwetgeving mag het werkelijke N-overschot van een met 'De Marke' vergelijkbaar bedrijf 190 kg ha^{-1} bedragen, het P-overschot 9 kg (20 kg fosfaat). Bij het project 'De Marke' was enkel de noodzakelijk geachte milieukwaliteit de maatstaf bij het vaststellen van een toelaatbare overschot.

Tabel 1. Belangrijkste doelen en hun normen (= maximale waarden) met betrekking tot N en P.

Doel	Norm
Vervluchtiging ammoniak	totaal 44 kg N ha^{-1} jr^{-1}, waarvan 30 kg uit mest
Uitspoeling nitraat	50 mg nitraat l^{-1} in bovenste grondwater
Vervluchtiging stikstofoxiden	3 kg N ha^{-1} jr^{-1}
Overschot N	128 kg N ha^{-1} jr^{-1} *
Uitspoeling P	0,15 mg P l^{-1} in bovenste grondwater
Overschot P	0,45 kg P ha^{-1} jr^{-1}, bij fosfaattoestand landbouwkundig voldoende; negatief bij hogere fosfaattoestand

* *Dit is een norm die berust op aannames met betrekking tot neerslagoverschot, denitrificatie en ophoping. Als die aannames niet correct blijken mag deze norm worden aangepast.*

De niet in Tabel 1 genoemde milieudoelen hebben vooral betrekking op het beperken van het gebruik van bestrijdingsmiddelen, het direct en indirect energieverbruik, de ophoping van zware metalen, het gebruik van grondstoffen (inclusief water), de ontwikkeling van natuurwaarden en de emissie van (andere) broeikasgassen. Voor deze doelen gelden in de regel alleen streefwaarden, geen nadrukkelijk te realiseren normen. Doel is het bedrijfssysteem, binnen de milieunormen en rekening houdend met streefwaarden, zo rendabel mogelijk te maken. Uitgangspunt is dus niet dat de rentabiliteit van de gangbare melkveehouderij moet worden geëvenaard. Vooral vanwege de na te streven rentabiliteit en herkenbaarheid voor de praktijk geldt voor de melkproductie een streefwaarde van 12.000 kg ha^{-1}, het gemiddelde in de zandgebieden aan het einde van de jaren tachtig.
Doel van het project is ook om bevindingen zo goed mogelijk over te dragen, ondermeer door korte informatielijnen naar praktijk en beleid. Omdat er in het landbouwkundig onderzoek nog weinig ervaring is met de gekozen methode van onderzoek (Vereijken, 1992), is het leren kennen van de voor- en nadelen ervan eveneens een doel.

Onderzoekmethode

Met eenvoudige modellen zijn berekeningen gemaakt voor uiteenlopende situaties met betrekking tot veestapel, grond en gewassen en hun management. De uitkomsten zijn gebruikt om bedrijfssystemen te ontwerpen die in theorie voldoen aan de eerder geschetste doelen en die geschikt zijn voor melkveebedrijven op de drogere zandgronden. Uit die verzameling systemen is het onderzoekstechnisch meest interessante op proefbedrijf 'De Marke' in praktijk gebracht, wordt daar op functioneren onderzocht en verder ontwikkeld. De resultaten die dit experimentele systeem realiseert, worden steeds vergeleken met de resultaten van berekeningen vooraf (hypothese) en met die van een fictief gangbaar bedrijf op zandgrond met een vergelijkbaar quotum per hectare (referentie). Experimenten binnen het systeem, zoals veldproeven, zijn soms gewenst om het gedrag van het systeem op onderdelen beter te kunnen verklaren of potentiële verbeteringen te verkennen. Resultaten van experimenten op het bedrijf zelf of daarbuiten worden gebruikt om de oorspronkelijke aannames en rekenregels te verbeteren en vervolgens ook het experimentele systeem. Door andere omstandigheden te veronderstellen kan

met deze aannames en rekenregels worden nagegaan hoe het bedrijf dan gefunctioneerd zou hebben.
Deze onderzoeksmethode, 'prototyping' genoemd, heeft enkele belangrijke voordelen. De hele weg van grondstof tot eindproduct krijgt aandacht en de verschillende bedrijfsonderdelen, inclusief hun interacties, worden in samenhang bekeken. De overdracht van kennis wordt bevorderd omdat belanghebbenden kunnen komen kijken en meedenken. Door een brug te slaan van theorie naar experimentele toetsing wordt voorkomen dat achter het bureau te lang aandacht wordt besteed aan elementen die in de praktijk minder belangrijk blijken, of dat anderzijds te weinig aandacht wordt besteed aan belangrijke zaken. Prototyping heeft ook nadelen. Het experimentele systeem moet gekozen worden uit meerdere mogelijkheden en vergelijking van systemen is niet mogelijk, omdat slechts één systeem in praktijk wordt gebracht dat zich bovendien ontwikkelt. Daardoor kunnen resultaten in de regel niet statistisch worden getoetst. Deze nadelen kunnen deels worden ondervangen door zeer uitgebreid en gericht te meten, deskundigen in te schakelen bij het verklaren van resultaten, en waar nodig onderdelen van het bedrijf elders vergelijkend te onderzoeken.

Proefbedrijf 'De Marke' en haar experimentele systeem

Het experimentele onderzoek wordt uitgevoerd op Proefbedrijf 'De Marke' in de Gelderse gemeente Hengelo (Achterhoek). Het bedrijf is 55 ha groot en heeft daardoor bijna twee keer zoveel grond ter beschikking als het gemiddelde melkveebedrijf in de zandgebieden. De Nederlandse Land- en Tuinbouw Organisatie verwacht dat melkveebedrijven in 2010 een dergelijke grootte zullen hebben (LTO, 1997). De grond is rond de vorige eeuwwisseling ontgonnen uit heide. Een licht humeuze bouwvoor van ongeveer 30 cm dik ligt op geel zand. Grondwater bevindt zich op de meeste plaatsen meerdere meters diep zodat het gewas er niet bij kan en capillaire opstijging geen rol speelt. Na enige dagen droogte ontstaat er vochttekort, na enige dagen regen is de grond met water verzadigd en kunnen meststoffen uitspoelen. De grond behoort daarmee tot de droogste en meest lekgevoelige van Nederland. Daar is bewust voor gekozen. Door in landbouwkundig èn milieukundig opzicht moeilijke omstandigheden te kiezen, komen problemen sneller en nadrukkelijker in beeld en wint het experimentele systeem aan overtuigingskracht.

Het systeem is zodanig opgezet dat zo weinig mogelijk voer nodig is om het quotum vol te melken. In de voederbehoefte wordt zo veel mogelijk voorzien door gewassen die op het bedrijf zelf worden geteeld. Het gebruik van (kunst)mest van buiten het bedrijf wordt zo beperkt mogelijk gehouden door een zo goed mogelijke benutting van de mest die door de eigen veestapel wordt geproduceerd. De uitwerking van deze benadering leidt tot een aantal kenmerkende verschillen met gangbare zandbedrijven met een vergelijkbaar melkquotum. Zo is het areaal grasland kleiner omdat meer maïs wordt geteeld. De belangrijkste reden daarvoor is de behoefte aan eiwitarm voer, om in het rantsoen het hoge eiwitgehalte van gras te compenseren. Bovendien kan maïs bij de oogst worden gesplitst in energierijke kolven en vezelrijk stro. De energierijke kolven kunnen krachtvoer vervangen, het vezelrijke stro past uitstekend in het rantsoen van droogstaande koeien en jongvee. Andere motieven zijn de geringe vochtbehoefte van maïs, waardoor minder hoeft te worden beregend, en de geringere behoefte aan meststoffen. In juli wordt tussen de maïs Italiaans raaigras gezaaid, dat zich direct na de maïsoogst sterk kan ontwikkelen. Het gras moet er voor zorgen dat resten van meststoffen en gemineraliseerde N niet naar het grondwater kunnen uitspoelen.
Het bedrijfsareaal is verdeeld in blijvend grasland en twee rotaties met ieder drie jaar gras, gevolgd door drie jaar (rotatie huiskavel) of vijf jaar (rotatie veldkavel) maïs. Het eerste jaar wordt de maïs niet bemest, omdat voldoende voedingsstoffen vrij komen uit de ondergeploegde graszode. De bemestingsniveaus, als som van drijfmest en kunstmest, zijn ongeveer 40% lager dan gebruikelijk. De periode waarin geen mest wordt uitgereden is langer dan bij gangbare bedrijven en de benodigde opslagcapaciteit voor dierlijke mest daardoor groter. Het blijvend grasland en de gewassen van de huiskavel worden beregend als dat nodig is om afsterven te voorkomen, of om voldoende vers gras te produceren om enigszins te kunnen blijven beweiden. De veldkavel, 30% van het areaal, wordt nooit beregend.
De melkproductie per koe is hoger dan op gangbare bedrijven, waardoor minder dieren nodig zijn. Het melkvee loopt minder uren in de wei, zodat een groter deel van de mest op stal wordt uitgescheiden en als meststof kan worden (her)benut. Op stal zijn voorzieningen getroffen om de vervluchtiging van ammoniak uit mest te beperken.

Organisatie

In Oost-Nederland werd vroeger het gemeenschappelijke grondbezit van de dorpsbewoners aangeduid met 'marke'. Ook in het project 'De Marke' gaat het om een breed maatschappelijk belang: een vitale melkveehouderij in een schoon milieu, een landschap met een hoge belevingswaarde en ruimte voor natuur. Het onderzoek wordt gefinancierd en bestuurd door het ministerie van Landbouw, Natuurbeheer en Visserij (LNV), door het ministerie van Volksgezondheid, Ruimtelijke Ordening en Milieubeheer (VROM) en door het landbouwbedrijfsleven. CLM, PV (voorheen PR) en Plant Research International (voorheen AB) hebben het project bedacht en zijn samen verantwoordelijk voor het onderzoek. Op onderdelen leveren andere instellingen een bijdrage. Zo wordt de kwaliteit van het bovenste grondwater jaarlijks gemeten door het Rijksinstituut voor Volksgezondheid en Milieuhygiëne (RIVM). Het project heeft een looptijd van zeker 10 jaar, gerekend vanaf de start van het experimentele systeem in 1992. De lange projectduur is nodig omdat een aantal effecten, waaronder een nieuw evenwicht in de bodemvruchtbaarheid, pas na lange tijd goed zichtbaar worden. In 1996 heeft een evaluatie plaats gevonden (Aarts *e.a.*, 1996) en is het systeem aangepast (Biewinga *e.a.*, 1996). Jaarlijks wordt een themadag gehouden waarop de resultaten van het experimentele systeem met deskundigen uitvoerig worden besproken. Het doel is conclusies te trekken ten aanzien van gewenste bijstellingen van het systeem (bedrijfsoptimalisatie) en ten aanzien van de betekenis van de resultaten voor melkveehouderij, overheid en onderzoek. In 2000 zal opnieuw een evaluatie plaatsvinden.

Leeswijzer

Het hoofdstuk direct volgend op deze inleiding is geschreven in 1991, kort voordat de voorbereidingsfase van het proefbedrijf werd afgerond. De blauwdruk van het experimentele systeem was toen vrijwel voltooid. Beschreven worden het waarom en hoe van het onderzoek, de achtergronden van het gekozen experimentele systeem worden toegelicht en aangegeven is welke resultaten verwacht worden. Hoofdstuk 2 heeft dus het karakter van een voorstudie. Experimentele resultaten van 'De Marke' komen vooral in de Hoofdstukken 3 tot en met 6 aan de orde. In Hoofdstuk 3 wordt de fosforhuishouding behandeld, Hoofdstuk 4 beschrijft de stikstofhuishouding. In Hoofstuk 5 staan waterverbruik door gewassen en grondwaterkwaliteit

centraal. De resultaten van 'De Marke' zijn in dat hoofdstuk gekoppeld aan de resultaten van onderzoek elders. Een belangrijke reden om elders onderzoek uit te voeren (veldproeven en proeven onder geconditioneerde omstandigheden) was de droogteproblematiek van 'De Marke'. Hoofdstuk 6 geeft een samenvattend beeld van 'De Marke' en vergelijkt de resultaten met die van hedendaagse melkveebedrijven. Het is vooral geschreven voor collega-landbouwkundigen. De Nederlandstalige samenvatting aan het eind van het proefschrift heeft overeenkomsten met dit hoofdstuk maar is geschreven voor een breder, Nederlands publiek. In Hoofdstuk 7 wordt de kennis die is opgedaan gebruikt om te berekenen in hoeverre de intensiteit van melkproductie (in kg ha^{-1}) afhankelijk is van het vochtleverend vermogen van de bodem en van de kwaliteiten van de ondernemer, uitgaande van de verliesnormen voor N en P zoals die in de wet zijn vastgelegd. De resultaten van 'De Marke' worden in dit hoofdstuk dus geëxtrapoleerd. Hoofdstuk 8 bevat de discussie. Aangegeven wordt in hoeverre projectdoelen zijn gerealiseerd en ook wat er nog moet gebeuren. Bovendien wordt stilgestaan bij de rol van de projectresultaten bij de verbetering van de positie van de Nederlandse melkveehouderij.

Literatuur

Aarts, H.F.M., E.E. Biewinga, G. Bruin, B. Edel & H. Korevaar, 1988.
Melkveehouderij en Milieu; een aanpak voor het beperken van mineralenverliezen. CABO-verslag 79, Wageningen.

Aarts, H.F.M. & J.H. van Gorp, 1989.
Veranderingen binnen het melkveebedrijf als reactie op milieueisen. Milieu *2:55-60.*

Aarts, H.F.M., E.E. Biewinga & A.B. Meijer, 1996.
Evaluatie rapport 1ste fase project 'De Marke'. 'De Marke' rapport nr. 13, Hengelo.

Aarts, H.F.M. & O.C.H. de Kuijer, 1997.
Duurzaam Landgebruik; van wensen en mogelijkheden naar voorbeeldsystemen. DTO werkdocument VD-4, Delft.

Biewinga E.E., H.F.M. Aarts & R.A. Donker, 1992.
Melkveehouderij bij stringente milieunormen. 'De Marke' rapport nr. 1, Hengelo.

Biewinga, E.E., H.F.M. Aarts, G.J. Hilhorst, F.C. Van der Schans & C.K. De Vries, 1996.
Duurzame melkveehouderij; doelstellingen, bedrijf en onderzoek in de tweede fase van 'De Marke'. 'De Marke' rapport nr. 19, Hengelo.

Bloemendaal, F., 1995.

Het Mestmoeras. Sdu Uitgevers, Den Haag.

Dekker, J.N.M. & T.E.M. van Leeuwen, 1998.

Voorstellen tot het formuleren van normen in de mestwetgeving: de strategie voor het ontwikkelen van verliesnormen. Milieu *1998/3: 134-143*

LNV, 1999.

Veehouderij en Zuivel. http://www.minlnv.nl (Internetsite Ministerie Landbouw, Natuurbeheer en Visserij). Den Haag.

LTO,1997.

Uitzicht op een veelzijdige toekomst. Nota LTO-Nederland nr. 630\631\N975642a.EHO, Den Haag.

Obbink, J.B., 1935.

De onmisbare. Drukkerij en Uitgeverij De Hofstad. Den Haag.

Stolwijk, H. & P. Veenendaal, 1995.

De betekenis van de landbouw voor de Nederlandse economie. Publicatie 1.29 LEI-DLO, Den Haag.

Vereijken, P., 1992.

A methodic way to more sustainable farming systems. Netherlands Journal of Agricultural Science *(40): 209-223.*

VROM, 1989.

Nationaal Milieubeleidsplan. Tweede Kamer 1989-1990, 21 137, nr.1-2 Ministerie van Volkshuisvesting, Ruimtelijke Ordening en Milieubeheer. Staatsuitgeverij, Den Haag.

Introduction

This thesis is the result of twelve-and-a-half years of research into the possibilities for making dairy farming meet societal demands. The research has been conducted within the project 'De Marke' under the joint responsibility of the Centre for Agriculture and the Environment (CLM, Utrecht), the Research Institute for Animal Husbandry (PV, Lelystad; formerly PR) and Plant Research International (formerly Centre for Agrobiological Research, CABO, and Institute for Agrobiological and Soil Fertility Research, AB, Wageningen). The background, design and results of the project have been described in 24 'De Marke' reports. The thesis is mainly based on these reports. This introduction indicates the importance of dairy farming for the Netherlands and the threats and opportunities for this sector. Subsequently, the objectives and approach for the 'De Marke' project are presented. Finally, as an overview, the contents of the other chapters are briefly described.

The importance of dairy farming

Shortly before the Second World War, dairy farming in the Netherlands was still seen as 'the largest fly-wheel in the economy' (Obbink, 1935). Although milk production has more than doubled since, the economic importance of dairy farming has strongly declined. In 1993, about 7% of the economic value added in the Netherlands was attributable to agriculture (supplying and processing industries included), and dairy farming accounted for one-third of that volume. Dairy exports amount to an annual sum of NLG 7 billion, one-third of which is exported to countries outside the European Union. That is slightly more than 2.5% of total Dutch exports (LNV, 1999; Stolwijk & Veenendaal, 1995). About 45,000 people work on a total of 32,000 dairy farms. Besides, many people are employed by agricultural contractors, the animal feed industry and the processing industry. Of the land under cultivation, 65% is used for production of grass (1,032,000 ha) and maize (239,000 ha), predominantly for dairy farming. Therefore, dairy farming is a dominant element in the Dutch landscape and plays a major role in shaping the countryside.
Agriculture, and dairy farming in particular, is deeply rooted in European society. The European Union (EU) has set minimum prices for several agricultural products including butter and milk powder. When there is a threat

of prices dropping below these thresholds, the EU buys up the products involved. In addition, export of dairy products to countries outside the EU is subsidised. That subsidy amounts to approximately NLG 0.40 of the farm gate milk price of NLG 0.75 per kilogram (LNV, 1999). To control rising costs in the EU budget, production restriction measures (the 'milk quotas') were introduced in 1984. Moreover, in the context of the General Agreement on Tariffs and Trade (GATT), an agreement was reached more recently that the subsidy on export would be cut back and that free market prices would apply for agriculture produce. The Netherlands is one of the 124 countries that have ratified that agreement. As compensation for loss of income, farmers in the EU will be financially supported; the magnitude of that support is to depend on their management with regard to environment. This criterion is in agreement with other policy measures taken at European level regarding the quality of the environment. One such measure, the 'Nitrate Directive', stipulates that the nitrate concentration in groundwater and surface water in the EU should not exceed 50 mg l^{-1}. Every member state is obliged to translate this directive into practical measures at the farm level. In the Netherlands this has resulted in manure legislation, making it compulsory for farmers to monitor and report inflows and outflows of nitrogen (N) and phosphorus (P) in fertilisers, feeds and agricultural produce (MINAS, MINeral Accounting System). Input through deposition and N fixation by legumes is not taken into account in this system. Losses (the difference between input and output) are linked to a maximum (loss norms). Fines have to be paid when these norms are exceeded.

These measures originate from the growing understanding that the rural area not only supplies traditional agricultural produce, such as milk and cereals, but also should provide society with such commodities as drinking water and recreational facilities. Moreover, the rural area is essential for the survival of a wide variety of organisms and for the preservation of links with our civilisation's cultural history. Especially in a densely populated country like the Netherlands, this perception offers opportunities because, in principle, the latter commodities are also marketable. In the near future, multifunctional use of land will be taken for granted (Aarts & de Kuijer, 1997). Costs spent on improvement of the environment should be recovered through extra, socially desirable products that can only be produced in a clean environment.

The functioning of the current dairy farming systems is insufficiently in keeping with societal demands on the rural area. Environmental quality is negatively affected, in particular by inefficient use of fertilizers, feed and water. Their use

has strongly increased especially because of the declining cost of these production factors relative to the production factors land and labour, but also through technological developments resulting from research. The problems are most evident in the sandy areas in the eastern, central and southern parts of the Netherlands. Farms in these areas are intensive, even by Dutch standards. Crops are heavily fertilised and sprinkler irrigation is used on a large scale in order to be able to produce large amounts of fodder. In the mid-1980s, only 14% of the N entering a dairy farm on sandy soil (in feed, fertiliser or precipitation; in total 568 kg ha^{-1}) left that farm in the form of milk or meat. Because accumulation in the soil does not play a major role on the longer term, it may be assumed that most of the remaining N (486 kg ha^{-1}) was lost to the environment, largely in the form of ammonia emission and leaching as nitrate (Aarts & Van Gorp, 1989). Of the P entering the farm (48 kg ha^{-1}), 33% was utilised; the remainder (33 kg ha^{-1}) accumulated in the soil to the point of saturation. The increasing use to sprinkler irrigation led to falling groundwater levels, and hence to damage to nature reserves dependent on upward water movement. Moreover, sprinkler irrigation is one of the causes of the shortage of groundwater for the preparation of drinking water. River water has to be used to supplement, thus increasing the cost price of drinking water by NLG 1.00 m^{-3}. Besides, the consumer prefers well water to Rhine or Meuse water.
To reduce damage to the environment, dairy farmers have to 1) extensify their farms by buying land or selling milk quota, (2) export manure or (3) utilise fertilisers, feed and water much more efficiently. The first two options are economically not very attractive in the Dutch situation. The 'De Marke' project has, therefore, focused on the last option, i.e. improving the efficiency of utilisation of resources.

'De Marke' project

The foundation for the 'De Marke' project was laid in the mid-1980s, when people became aware that dairy farming was the cause of serious environmental problems, in particular due to leaching of nitrate and phosphate, and volatilisation of ammonia. In the report 'Melkveehouderij en Milieu' ('Dairy farming and Environment'; Aarts *et al.*, 1988), CLM, PR and CABO proposed a strategy for tackling the central problem, the inefficient utilisation of minerals (N included) at the farm level. These institutes recommended the

establishment of an experimental farm on which concerted efforts would be made to improve mineral utilisation in each link of the cycle 'cattle→ manure→ soil→ crop→ feed→ cattle', with sound environmental quality as the result.
The proposal for establishment of an experimental farm found support in farming, research and policy-making circles, although some initial resistance had to be overcome (Bloemendaal, 1995). Some preferred to deny the problems ('Dairy farming is clean and natural. That image must not be tampered with!'), while others questioned the scientific meaningfulness of the project and its impact on the image of scientific research ('You cannot expect new scientific insights from such a project.'). These reactions mirrored the character of that era: a Ministry of Agriculture in The Hague with little perception of broader societal interests and a research community that held as its highest goal appreciation from its own 'enlightened' inner circle. In contrast, there were people, including dairy farmers, that were convinced from the beginning that this type of approach was necessary. The attitude of the Ministry of Environment was positive. Its minister at that time did practical training on the dairy farm of Bart Edel, one of the members of the team trying to set up the experimental farm. The period 1988–1992 was needed to surmount all conceptual, emotional, organisational and financial obstacles, to find a site for the experimental farm and to actually build and lay out the farm. The experimental farm 'De Marke' finally began functioning as a complete prototype farming system in the spring of 1992.

Objectives

The main objective of the project is to develop and demonstrate a farm system for land-bound milk production that meets stringent environmental norms for N, P and substances foreign to the system (e.g. pesticides). Cost-effective management and maintenance of soil fertility are the aims pursued, taking into account other societal objectives, such as labour conditions and animal welfare. No manure should be moved from the farm and young stock should be reared on the farm. Subsidiary aims are reduced emission of greenhouse gases, reduced use of energy and raw materials (ground water included) and improvement of the natural environment.
A detailed justification and elaboration of the objectives is given in the farm and research plan for the experimental farm (Biewinga *et al.*, 1992). The norms and target values for the objectives were derived from the first National

Environmental Policy Plan (VROM, 1989). As many norms had not yet been formulated at farm level, they had to be translated for the design of 'De Marke'. The main environmental objectives and their norms are summarised in Table 1. These norms must be realised in any case.

The norms for 'De Marke' are much more stringent than the loss norms laid down by the government in manure legislation. The norms set by the government are the result of a compromise between demands on environmental quality and anticipated agricultural problems (Dekker & Van Leeuwen, 1998). Under Dutch manure legislation, the maximum real N surplus for a farm similar to 'De Marke' is 190 kg ha^{-1} and the P surplus 9 kg ha^{-1} (20 kg ha^{-1} phosphate). In the 'De Marke' project the required minimum environmental quality served as the only criterion for establishing permissible surpluses. The environmental goals not listed in Table 1 refer in particular to the reduction in pesticide use, direct and indirect energy consumption, accumulation of heavy metals and the use of raw materials (water included), the development of nature values and reduction in the emission of greenhouse gases. For most of these objectives, only target values have been set, no norms that have to be realised. The aim is to make the farming system as profitable as possible, however, within the limits of the environmental norms, while taking

Table 1. Main objectives for deducing N and P losses.

Objective	Norm
Emission of ammonia	44 kg N ha^{-1} yr^{-1} (not exceeding 30 kg from manure)
Leaching of nitrate	50 mg l^{-1} nitrate in the upper groundwater
Emission of nitrous oxides	3 kg N ha^{-1} yr^{-1}
N surplus	128 kg ha^{-1} yr^{-1} *
Leaching of P	0.15 mg l^{-1} in the upper groundwater
P surplus	0.45 kg ha^{-1} yr^{-1} for soils with an agriculturally adequate phosphate status; negative for a higher phosphate status

* *This norm is based on assumptions regarding precipitation surplus, denitrification and accumulation. If these assumptions appear incorrect, this norm may be adjusted.*

into account all targets. Thus, the point of departure is not to match current dairy farming in profitability. In view of the profitability required and the recognizability for commercial dairy farmers, the target for milk production is 12,000 kg ha^{-1}, the average value for farms on sandy soil in the late 1980s.
Another objective of the project is to disseminate the results in the best possible way, for example through short lines of communication to both farming and policy circles. Because of the limited research experience with this methodology (Vereijken, 1992), still another objective was to get acquainted with its advantages and disadvantages.

Research methodology

Simple models were used to perform calculations for a wide range of situations with respect to livestock, soils and crops, and their management. The results were used for the design of farm systems that, in theory, meet the objectives described above and are suitable for dairy farms on dry sandy soil. From this set of systems, the system judged as most interesting from a research point of view was implemented on experimental farm 'De Marke', where its performance was monitored and where it has been further developed. The results from this experimental system are continuously compared with both the results of the original calculations (the hypothesis) and those of a hypothetical current farm on sandy soil with a comparable milk quota per hectare (the reference). Experiments within the system, such as field trials, can be desirable to better explain the behaviour of components of the system or to explore the scope for improvement. Results of experiments on or outside the farm are used to improve the original assumptions and calculation rules and, subsequently, the experimental system itself. By assuming other conditions, these assumptions and calculation rules can be used to explore how the farm would have functioned in that situation.
This research methodology, called 'prototyping', has important advantages. Attention is paid to the whole chain from raw material to end product and, moreover, the connections among the various components of the farm, including their interactions, are analysed. Transfer of knowledge is promoted by allowing people who are interested to visit the farm and to think along with the farm staff. By bridging the gap between theory and experimental testing it is possible to avoid desk work that is devoted to elements with little practical relevance, while not enough attention is paid to important aspects. Prototyping

has its drawbacks, however. The experimental system implemented is selected from various options, and there is no possibility of comparing different systems: only a single system is put to practice and that system continuously develops. Therefore, results can not usually be tested statistically. These disadvantages can be overcome, in part, by very extensive and specific measurements, by involving experts explaining the results, and if necessary through comparative research of farm elements with comparable elements on farms elsewhere.

Experimental farm 'De Marke' and its farming system

The experimental research is conducted on the experimental farm 'De Marke', in the municipality of Hengelo, (situated in the Achterhoek region of the Province of Gelderland). The farm, with an area of 55 ha, has almost twice as much land as an average dairy farm in sandy areas. The Dutch Farmers Union expects that most dairy farms will have that size by 2010 (LTO, 1997). 'De Marke' land was reclaimed from heather some 100 years ago. The yellow sandy subsoil is covered by a 30 cm thick humic topsoil. On most places, the water table is so deep that the crop cannot reach it and that capillary rise does not play a role at all. A few successive dry days lead to moisture deficiency, and after some successive rainy days the soil is saturated, with the associated risk of nutrient leaching. These soils are among the driest and most leaching-sensitive in the Netherlands. It was a deliberate choice to situate 'De Marke' on such a site. By selecting difficult conditions, both from an agricultural and an ecological point of view, problems manifest themselves earlier and more evidently, and the experimental system gains in 'convincing power'.
The system design is such, that the amount of feed that has to be purchased to be able to attain the full milk quota is kept to a minimum. Feed requirements are met as much as possible by home-grown crops. Purchase of fertiliser and manure is minimised by optimising utilisation of the manure produced on the farm. Implementation of this approach results in some remarkable differences from current farms on sandy soil with a similar milk quota. The grassland area is smaller because more silage maize is grown. The main rationale for this is the requirement for low-protein fodder to compensate for the high protein content of grass in the feed rations. Moreover, the maize can be split at harvest into energy-rich cobs and fibre-rich stover. The cobs can replace concentrates, while the stover fits excellently into the rations of dry cows and young stock.

Other motives are the low moisture requirement of maize, thus reducing the need for sprinkler irrigation, and its lower fertiliser requirement. In July, Italian ryegrass is undersown the maize, which can develop immediately after the maize has been harvested. The grass must prevent leaching of fertiliser residues and mineralized N into the groundwater.

The farm area is divided into permanent grassland and two rotations of three years under grass, followed by either three years (for inner fields, i.e. at a short distance from the farm buildings) or five years (for outer fields, i.e. farther from the farm buildings) under maize. The maize is not fertilised in its first year, because the ploughed in grass provides sufficient nutrients. Fertilisation levels, animal manure and mineral fertilisers combined, are about 40% lower than in current farming systems. As the manuring period is shorter than on current farms, the storage capacity for manure must be greater. The permanent grassland and the crops on the inner fields are sprinkler irrigated whenever necessary to avoid death by drought or in order to produce sufficient fresh grass for (limited) grazing. The outer fields (30% of the total area) are never irrigated.

Because milk production per cow is higher than on current farms, fewer animals are needed. As grazing time is shorter, a larger proportion of the manure is excreted indoors, and can be used to fertilise the land. In the stable provisions have been made to reduce emission of ammonia.

Organisation

In the eastern part of the Netherlands, village common land used to be called 'marke'. For the 'De Marke', too, there is broad public interest, i.e. a vital dairy farming sector in a clean environment, a landscape with a high scenic value and scope for nature development. The research is financed jointly by the Dutch ministries of Agriculture and Environment and by Farmers Union. CLM, PV and Plant Research International have designed the project and are jointly responsible for the research component. Other institutions contribute to specific elements. For example, the quality of the upper groundwater is measured annually by the National Institute of Public Health and Environment (RIVM). The 'De Marke' project will run for at least 10 years (as from the start of the experimental system). That duration is needed because some effects, including a new equilibrium in soil fertility status, will only manifest themselves after a period of several years. In 1996, the project was evaluated (Aarts *et al.*,

1996) and the prototype system adapted (Biewinga *et al.*, 1996). Every year a thematic day is organised on which the results of the experimental system are discussed in detail with specialists. The aim is to arrive at conclusions regarding desirable adjustments (farm optimisation) and the relevance of the results for the dairy farming sector, government policy and research. In 2000, the system will be re-evaluated.

Overview of this thesis

Chapter 2, was written in 1991, shortly after completion of the preparatory phase. The blueprint of the experimental farming system had been virtually finalised by then. It describes the 'why' and the 'how' of the research plan, explains the background of the experimental system selected and describes the results anticipated. Experimental results are described and discussed primarily in Chapters 3 to 6. Chapter 3 focuses on the phosphorus cycle and Chapter 4 on the nitrogen cycle. The focus in Chapter 5 is on water consumption by crops and on groundwater quality. In that chapter, results from 'De Marke' are compared with research results from other sites. An important reason for initiating research elsewhere (field and controlled conditions) was the drought problem on 'De Marke'. Chapter 6 presents a comprehensive picture of 'De Marke' and compares its results with those of current dairy farms. In Chapter 7, the knowledge acquired is used to explore to what extent future milk-production intensity (in kg ha^{-1}) is depending on moisture supply by the soil and to what extent it can be influenced by management skills of the farmer, starting from the loss norms dictated by law. Thus, the results of 'De Marke' are extrapolated in this chapter. Chapter 8 contains a general discussion describing to what extent project objectives have been realised and what is still to be done. It also deals with the role of the project results in improving the position of the dairy farming sector in the Netherlands.

References

Aarts, H.F.M., E.E. Biewinga, G. Bruin, B. Edel & H. Korevaar, 1988.
Melkveehouderij en Milieu; een aanpak voor het beperken van mineralenverliezen.
CABO-verslag 79, Wageningen.

Aarts, H.F.M. & J.H. van Gorp, 1989.
Veranderingen binnen het melkveebedrijf als reactie op milieueisen. Milieu *2:55-60*

Aarts, H.F.M., E.E. Biewinga & A.B. Meijer, 1996.
Evaluatie rapport 1ste fase project 'De Marke'. 'De Marke' rapport nr. 13, Hengelo.

Aarts, H.F.M. & O.C.H. de Kuijer, 1997.
Duurzaam Landgebruik; van wensen en mogelijkheden naar voorbeeldsystemen. DTO werkdocument VD-4, Delft.

Biewinga E.E., H.F.M. Aarts & R.A. Donker, 1992.
Melkveehouderij bij stringente milieunormen. 'De Marke' rapport nr. 1, Hengelo.

Biewinga, E.E., H.F.M. Aarts, G.J. Hilhorst, F.C. van der Schans & C.K. de Vries, 1996.
Duurzame melkveehouderij; doelstellingen, bedrijf en onderzoek in de tweede fase van 'De Marke'. 'De Marke' rapport nr. 19, Hengelo.

Bloemendaal, F., 1995.
Het Mestmoeras. Sdu Uitgevers, Den Haag.

Dekker, J.N.M. & T.E.M. van Leeuwen, 1998.
Voorstellen tot het formuleren van normen in de mestwetgeving: de strategie voor het ontwikkelen van verliesnormen. Milieu *1998/3: 134-143*

LNV, 1999.
Veehouderij en Zuivel. http://www.minlnv.nl (Internetsite Ministerie Landbouw, Natuurbeheer en Visserij). Den Haag.

LTO,1997.
Uitzicht op een veelzijdige toekomst. Nota LTO-Nederland nr. 630\631\N975642a.EHO, Den Haag.

Obbink, J.B., 1935.
De onmisbare. Drukkerij en Uitgeverij De Hofstad. Den Haag

Stolwijk, H. & P. Veenendaal, 1995.
De betekenis van de landbouw voor de Nederlandse economie. Publicatie 1.29 LEI-DLO, Den Haag.

Vereijken, P, 1992.
A methodic way to more sustainable farming systems. Netherlands Journal of Agricultural Science *(40): 209-223*

VROM, 1989.
Nationaal Milieubeleidsplan. Tweede Kamer 1989-1990, 21 137, nr.1-2 Ministerie van Volkshuisvesting, Ruimtelijke Ordening en Milieubeheer. Staatsuitgeverij, Den Haag

Doch al hadt gij zeer veel stalmest dan zoudt gij met al dien stalmest zoo dik op uw land te brengen, soms van ééne soort voedingsstof te veel in de grond aanbrengen. Bijvoorbeeld gij zoudt er veel te veel stikstof in brengen, die niet gebruikt wordt door de plant, en die later bij regen met het grondwater wegzakt en wegloopt, zoodat deze dure stikstof verloren gaat, vooral als de grond niet met groeiende planten bedekt is.

Pastoor H.W. Roes, 1908. Bemesting op zandgrond. Boerenbond Deurne

Dairy farming systems based on efficient nutrient management

Netherlands Journal of Agricultural Science 40 (1992) 285-299

Dairy farming systems based on efficient nutrient management

H.F.M. Aarts[1], E.E. Biewinga[2] & H. van Keulen[1]

[1] DLO-Centre for Agrobiological Research, P.O. Box 14, NL 6700 AA Wageningen, Netherlands

[2] Centre for Agriculture and Environment, P.O. Box 10015, NL 3505 AA Utrecht, Netherlands

Received 3 September 1991; accepted 24 December 1991.

Abstract

In Dutch dairy farming, dramatic nutrient losses occur, causing serious environmental problems and representing an economic and energy waste. So farming systems have to be developed based on efficient nutrient management. A dairy farm is characterized as a system with soils and crops, forage, cattle and manure as main components. Simple models of nutrient flows in and between components of the farming system were used to design a prototype system for a new experimental farm on sandy soil, that has to meet strict environmental demands. Experimental results of this farm will be used to improve the models and the models will be used again to optimize the prototype system. Initial results of modelling suggest that nutrient losses can be reduced considerably by more accurate management and introduction of rather cheap and simple measures. However, more radical and expensive modifications of the farming system are necessary to meet future standards of the Dutch government for maximum allowable emissions.

Keywords:

dairy farming, forage production, milk production, environmental demands, nutrient flow, nutrient utilization, nitrogen, phosphorus

Introduction

Dairy farming, occupying about 65% of the cultivated area and providing the main income to some 35% of its farmers, is the most important sector of Dutch agriculture. In the past, milk production systems were characterized by careful use of animal manure, limited milk production per hectare and integration of arable and dairy farming (Damen, 1978). Over the last decades, however, these systems were strongly intensified by increased inputs of anorganic fertilizers and purchased feeds. Introduction of the milk quota system in 1984 has resulted in a decrease of about 15% in milk production. At present, average annual milk production on dairy farms is about 11 500 kg ha^{-1}, but considerable differences exist between regions and individual farms, with systems on sandy soils being more intensive than on clay or peat soils.

Intensification has also led to a serious imbalance between inputs of nutrients in purchased fertilizers, concentrates, roughage and atmospheric deposition and outputs in milk and meat (Table 1).

On Dutch dairy farms, output represents on average about 14% of the input for nitrogen (N), 32% for phosphorus (P) and 17% for potassium (K). The average annual surplus of 32 kg P ha^{-1} mainly accumulates in the soil, but continued accumulation will lead to saturation and leaching. The N surplus (about 470 kg ha^{-1}) contributes to environmental pollution by ammonia volatilization, runoff, leaching and denitrification. Dairy farming appears to be the major source of ammonia volatilization and associated acidification (Heij *et al.*, 1991; Van Breemen *et al.*, 1982). Denitrification would seem harmless to the environment, but in addition to N_2, N_2O is produced, a greenhouse gas that also affects the ozone layer (Bach, 1989), while denitrification in the subsoil may result in groundwater pollution by sulphates and heavy metals. Accumulation of N in soil organic matter is difficult to quantify, because of the large quantities present, but available evidence suggests that it accounts for a negligible part of the N surplus (Janssen, 1984).

Recently, the Dutch government has presented target values for emissions of N into the air and into groundwater and surface water, and for additions of P to the soil in the year 2000. For ammonia volatilization it is set at a reduction of 70% compared to the level in 1980. The nitrate concentration in the water at a depth of 2 m below groundwater level should be below 11.3 mg N l^{-1}.

Table 1. Average annual nitrogen, phosphorus and potassium balances of specialized dairy farms on sandy, peat and clay soils in the Netherlands, 1983-1986 (Aarts et al., *1988).*

	Sand			Clay			Peat		
	N	P	K	N	P	K	N	P	K
Input (kg ha^{-1})									
- fertilizers	331	15	30	340	19	6	295	12	17
- concentrates	137	25	74	122	21	65	127	23	68
- purchased roughage	44	7	34	28	4	18	33	5	20
- atm. deposition	48	1	4	39	1	4	42	1	4
- miscellaneous	8	0	4	9	1	3	37	3	9
Total	568	48	146	538	46	96	534	44	112
Output (kg ha^{-1})									
- milk	67	12	19	60	11	17	61	11	17
- sold livestock	14	4	1	11	3	1	11	3	1
- miscellaneous	1	0	0	1	0	0	0	0	1
Total	82	16	20	72	14	18	72	14	19
Input - output (kg ha^{-1})	486	32	126	466	32	78	462	30	93
Output/input (%)	15	33	14	13	30	19	14	32	17

Total P application in anorganic fertilizer and manure should not exceed output in crop products. On P-saturated soils input will be even more restricted, to lower the P content of the soil. Therefore, societal demands on dairy farming systems with respect to N losses and P inputs are to become more stringent, requiring more efficient nutrient utilization. In addition, the health and well-being of men and animals, nature and landscape conservation and the use of energy should be taken into account. Nevertheless, costs of milk production, including reasonable income, should not exceed financial returns.

The ultimate goal of farming systems research is to offer guidelines to farmers to design and develop their farms, taking into account their specific circumstances, such as soil type or farm size, and both short- and long-term objectives. This paper describes a research approach to generate the knowledge

required for improved nutrient utilization in an economically optimum way. Integration of dairy farming and nature conservation is discussed elsewhere (Hermans & Vereijken, 1992).

Nutrient flows in dairy farming

Characteristic for dairy farming systems is the combination of plant and animal production. By exchanging manure and forage between the plant and animal components, nutrients cycle through the system, but nutrient losses also occur. In Figure 1, the main N flows on an 'average' farm on sandy soil are quantified.

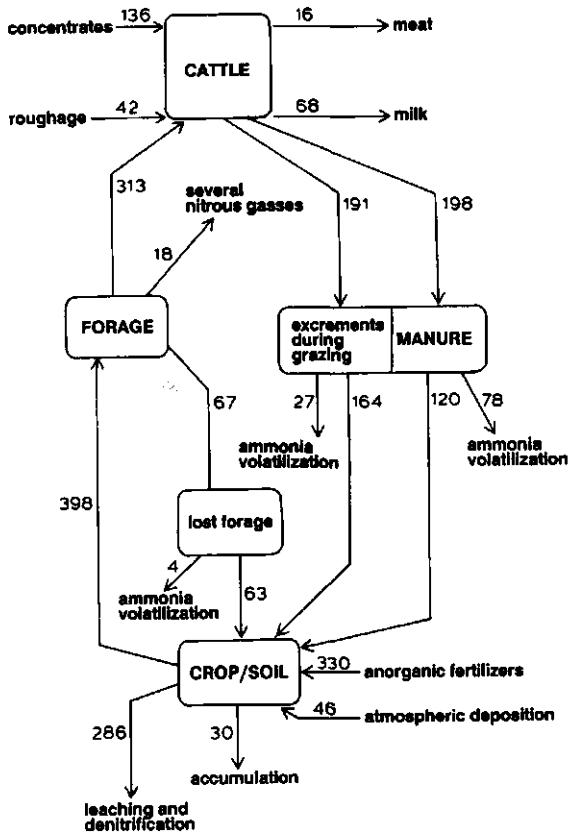

Figure 1. Main N flows in an average dairy farming system on sandy soil, 1983-1986. Numerical values are kg N ha^{-1} yr^{-1}.

Only a minor part of the N consumed by cattle is converted into milk and meat: about 80% is excreted in urine and faeces. A quarter of this is lost through ammonia volatilization, especially from the excrements produced indoors. The excessive input of N fertilizer and the irregular distribution of excrements during grazing result in 40% loss of N input from the soil, by leaching of nitrate and denitrification (Van der Meer & Van Uum-Van Lohuyzen, 1986). A small part of the N taken up by the crop is lost by volatilization of ammonia and other nitrous gasses during growth and forage conservation. Moreover, some ammonia volatilizes from crop residues, left after grazing and harvesting.

Efficient nutrient management; constraint and perspectives

Single nutrient flows can be influenced by changing management. However, intervening in one step of the cycle may affect nutrient flows elsewhere, i.e. covering a slurry storage reduces direct ammonia emissions, but most of that ammonia will volatilize soon after slurry application, unless a low-emission technique is applied. Injection of slurry into the soil may reduce ammonia emissions considerably, but will lead to increased leaching of nitrate if the input of anorganic N fertilizers is not reduced. Therefore, in a strategy aiming at minimum losses, all the components of the system should be taken into account. Efficient nutrient management implies efficient utilization of nutrients in all stages of the cycle. Hence, conversion of nutrients from manure into forage and from feed into milk and meat should be maximized. Quantifying nutrient balances of the main components of the system can be useful to identify major losses and to find potential limiting or preventive measures.
In research ample attention has been paid to single measures to reduce losses, in the past mainly to economize on fertilizer and feed use, recently mainly to reduce environmental contamination. A considerable amount of information is, therefore, available on the effect of various measures on nutrient losses (e.g. Aarts *et al.*, 1988; Korevaar & Den Boer, 1990). Unfortunately, the effects of most measures have not been tested in combination with other measures. Some measures, like avoiding application of slurry in autumn, or slurry injection, are almost always very effective. The costs and benefits of other measures, both in environmental and economic terms, may depend strongly on specific farm conditions. For instance, growing silage maize to balance the high N content in the summer diet of cows is difficult on peat soils. On these soils,

however, a comparable result can be achieved by reducing the N fertilization level of the grass. Growing fodder-beets to partially substitute concentrates is most attractive on farms with a relatively low milk production level per hectare and consequently a surplus roughage. The costs of reducing N losses by restricted grazing strongly depend on farm infrastructure. Therefore, in principle for each group of farms with the same relevant characteristics, or even for each farm, a specific set of consistent measures to meet environmental and economic goals should be developed. Nevertheless, some aspects of optimizing nutrient utilization in the main farm components can be formulated in general terms.

Cattle

At maximum, 43% of the N ingested by lactating cows can be converted into milk and liveweight gain (Van Vuuren & Meijs, 1987), whereas the actual utilization is only 15-25%. The quantity of faeces N of grazing cows is rather constant (Kemp *et al.*, 1979; Van Vuuren & Meijs, 1987). Hence the N surplus in the diet is excreted mainly in urine.

The quality of proteins in the diet also influences the utilization of N. Part of the feed protein is degraded in the rumen. The amino-acids and ammonia produced in the process will be used for microbial growth if enough energy is available, or the surplus will be excreted in urine. As heavily fertilized grass contains a substantial surplus of rumen degradable protein, reducing the protein content by restricted fertilizer application is an important option to improve utilization during grazing (Van Vuuren & Meijs, 1987). Including silage maize, with its low protein content, in the diet has a similar effect (Valk *et al.*, 1990). Where that is not feasible, low protein/high energy concentrates are an alternative.

Utilization of dietary N can also be improved by higher milk production per lactation, because feed requirements per kilogram milk are lower. A higher lifetime milk production means lower replacement rates, requiring less calves to be reared, a rather inefficient form of protein utilization.

Animal manure

To restrict ammonia losses, transport time of excrements produced indoors to closed storage should be minimized by a slightly sloping floor with a central

urine-drain and the use of a dung scraper. Preliminary research results suggest a reduction in ammonia volatilization of 50-60% compared to a conventional stable. Storage capacity for slurry, covering al least eight months of slurry production at the farm, should be available to avoid the necessity of slurry application during autumn and winter.

Under the common method of surface spreading of slurry, 25-35% of its N is lost through ammonia volatilization (Van der Meer *et al.*, 1987). Injection of slurry into the soil will prevent ammonia losses almost completely. Also diluting slurry before spreading, or sprinkling during or shortly after application, may reduce losses considerably.

During grazing, faeces and urine are excreted in patches, leading to very high N concentrations locally: in urine patches about 500 and in dung patches about 2,000 kg ha^{-1} (Lantinga *et al.*, 1987). As N in the dung is mainly in stable organic form, only some 13% is lost as ammonia. Nitrogen in urine mainly consists of urea, which easily dissociates in ammonia and carbon dioxide. However, most urine penetrates into the soil, restricting ammonia losses to about 13% (Van der Molen *et al.*, 1989; Vertregt & Rutgers, 1988), while the remainder is transformed into nitrate. Such high amounts of mineral N cannot be taken up by a crop, so a considerable proportion may leach. Restricting grazing to daytime reduces the number of urine and dung patches. If maize is fed indoors, N content in urine will be reduced concurrently, so that, at a given level of fertilizer input, nitrate leaching will be lower (Korevaar & Den Boer, 1990). A zero-grazing system would reduce nitrate leaching even more, but is detrimental to animal welfare and also labour-intensive.

Soil and crop

Increasing forage production by higher fertilizer application reduces the need for purchased feed, but increases the risk of nitrate leaching. The current Dutch fertilizer recommendation is based only on economic cost-benefit analyses, which at current prices results in a break-even point of about 7-8 kg DM kg^{-1} applied. For grassland on clay and sandy soils, the recommendation is 400 kg N ha^{-1} yr^{-1}, including effective N in applied manure (Prins *et al.*, 1988); for silage maize it is 150 kg N ha^{-1} yr^{-1}. On many farms, N inputs are higher, partly because effective N in animal manure is underestimated. As a consequence, substantial quantities of N will leach to the groundwater.

Sub-optimal growing conditions are another cause of low nutrient utilization. Quite often the expected yield, on which fertilizer application was based, is not realized, because of management errors or water stress. Hence, improving growing conditions can reduce nutrient emissions. At a given level of N input, nitrate leaching on grassland is much higher under grazing than under mowing. Hence, fertilizer application should be based on the prevailing growing conditions and the mode of exploitation of the grass.

Maize growth stops rather early in autumn, compared with grass or fodder-beets. Moreover, nutrient uptake at the end of its growing season is rather inefficient. As a result, substantial amounts of mineral N may accumulate in the soil towards the end of the year. To reduce the risk of nitrate leaching in autumn and winter, a catch crop can be grown immediately after harvest (Scott *et al.*, 1987).

If the land is suitable for both grassland and arable cropping, the ratio of the areas of the different crops may be optimized, taking into account both the desired quantities and qualities of forages, and the possibilities to apply animal manure. For example: on soils with limited moisture supply, feed energy production per unit area of maize is higher than for grass, so from that point of view, expanding the area of maize is attractive. However, nutrient uptake is lower, so on maize land less slurry is permitted. Therefore, expanding the maize area to increase feed energy production may lead to slurry surplus and increased demand for purchased proteins, which puts a limit on that expansion. In current practice, a large proportion of the manure of the dairy farm is used on permanent maize land. Besides, part of the slurry of pig farms is used on these fields. As a result P accumulates in the soil, whereas on fields permanently cropped with grass, purchased P fertilizers have to be applied to maintain their P status. Therefore, it is essential that the manure is distributed according to crop nutrient requirements and P status of the soils.

Forage

The proportion of farm-produced forage that is utilized by cattle should be kept as high as possible to restrict nutrient losses from crop residues and the need for purchased feeds that cause extra inputs of nutrients. In practice, losses up to 20% of the potentially 'harvestable' grass production, and about 10% of maize and fodder-beets, are common. Losses can be reduced by restricting the daily grazing time and the total grazing period per field. Better timing and methods of

harvesting also will reduce losses in grass and maize considerably and improve forage quality. Generally these measures will be economically viable, though they put high demands on the motivation and skills of the farmer.

Research approach

Whole-farm system research on interactions and overall effects of integrated measures is needed for a substantial improvement in nutrient utilization. However, that presents two major methodological problems. First replicates are hardly possible, because of specific farm conditions, such as soil type and skill of the farmer. Second, these specific conditions hamper extrapolation of results to other farms. Moreover, system research is expensive because a complete farm is needed and extensive observations have to be made. An attractive solution to these problems is to combine system modelling and system prototyping. Modelling is used to generate and evaluate prototype systems (Van Keulen & Wolf, 1986; Spedding, 1990; Spedding, 1988). Prototyping is needed to validate and improve the models. Therefore an important part of the experimental work aims at quantifying flows of nutrients, especially N. That includes measurement of animal protein intake, N content of manure and ammonia volatilization, both indoors and outdoors. Also leaching, mineralization and crop uptake of N have to be measured. If models have proven to be valid, they can be used as a tool for farming systems design and development in general, thus serving as a means of 'translating' research results to other conditions.

System modelling

Models represent simplified descriptions of reality. Accurate and reliable predictions require simple models, calibrated on rather extensive data collected in the environment where the models have to be used. Comprehensive models are not suitable for predictive purposes. These models contain many functions and parameters, each with its own uncertainty, accumulating in the simulated final result. Their usefulness is more in deriving the concepts for simple, causal relationships, needed in the simple models (Spitters, 1990). Therefore, simple models have been used to describe and integrate the main components of the dairy farming system. They were used to calculate the effects of N and moisture

supply on dry matter yield and N content of crops, the influence of method of manure application on ammonia volatilization, and the effects of diet composition on milk production and excretion of nutrients in urine and faeces. Some of the relationships between management practices and nutrient flows have been reliably quantified, such as the effect of slurry injection on ammonia volatilization, others are more speculative, like the influence of grazing systems on yield losses, which appear to be strongly affected by the management skill of the farmer. Examining the range of responses to this type of measures allows analysis of the effect of farmer's skill on farming results.

System prototyping

The most promising prototype, according to the initial results of modelling, will be examined in practice by a joint effort of the Centre for Agriculture and Environment, the Centre for Agrobiological Research and the Research Station for Cattle, Sheep and Horse Husbandry. Recently, the Experimental Farm for Dairy Husbandry and Environment ('De Marke') came available for this purpose. The farm is located in the east of the Netherlands on a well-drained sandy soil. It comprises 55 ha, twice the size of an 'average' farm, but necessary to produce feed for the number of cows needed for a valid experiment. Some of the environmental restrictions imposed on the farm have been quantified explicitly in government regulations, others have been derived from more generally formulated targets and converted into quantitative criteria at farm level. A reduction in ammonia volatilization of at least 70%, compared to the average situation in 1980, implies an upper limit of 40 kg N ha^{-1} yr^{-1}. For a well-drained sandy soil and an annual precipitation surplus of 300 mm, nitrate leaching should not exceed 34 kg N ha^{-1} yr^{-1}, to comply with the standard of 11.3 mg N l^{-1}. Total annual N losses, including denitrification and runoff, should not exceed 128 kg ha^{-1}. Accumulation of P should be avoided, if the P status of the soil is within the agronomically satisfactory range. If it exceeds that, the P reserves should be reduced. For the experimental farm as a whole this implies an annual permitted surplus of 0.4 kg N ha^{-1}. Moreover, all manure produced should be applied on the farm. In addition, K leaching should be minimized, pesticide and energy use limited, well-being of man and animal taken into account, and financial output maximized.

Initial results of modelling

System design

With the 'current' system (I) as a reference, an 'improved' system (II) and a 'further improved' system (III) have been designed, based on constraints and perspectives of efficient nutrient management as described above. The latter aims at meeting the environmental standards of 'De Marke'. System I can be characterized as a dairy farm on well-drained sandy soil, comparable to the 'average' dairy farm in the mid-eighties (Table 2). The risk of nitrate leaching is high on this soil, but grass and other fodder crops can be grown and slurry injection is possible. Measures to reduce nutrient losses have been selected on the basis of cost-benefit analyses. System II is characterized by more accurate management, including concentrate supply according to the individual needs of the animals and more attention to grazing, harvesting and conservation losses. The measures introduced are relatively simple and cheap, being already practiced by innovative farmers. There is one exception, requiring substantial investments: the slurry storage has to be expanded and covered. System III is characterized by additional investments and measures to further improve the efficiency of nutrient management (Tables 2 and 3).

In systems II and III, slurry is only applied in spring and summer by injection, soon to be compulsory in the Netherlands. The costs of this measure, in terms of prevented volatilization losses, are about NLG 3.5 kg^{-1} N, twice the costs of anorganic-fertilizer N. For economic reasons the stable has not been adapted in system II. In system III such adaptations have been assumed to minimize N losses, at a cost of about NLG 23 kg^{-1} N saved. To reduce N intake, and consequently the amount of N in excrements, grazing has been changed from continuous grazing to daytime grazing only, combined with feeding of maize silage, as is common practice already at about 50% of the dairy farms on sandy soils. In system III the grazing season ends on 1 October, one month earlier than in both other systems. As grazing is restricted, more maize silage is needed in systems II and III, so grassland is partly replaced by arable land. In system III, fodder-beets and maize (corn-cob mix) partly replace purchased concentrates. In system II, grass is fertilized annually with 310 kg N ha^{-1}, including effective N in animal manure, and maize with 145 kg N ha^{-1}. In system III, where annual leaching has to be restricted to 34 kg N ha^{-1}, annual N input on grassland is reduced to 235 kg ha^{-1}.

Table 2. Characteristics of a 'current' Dutch dairy farm on sandy soil, 1983-1986, and of the same farm after (further) improvement (data on annual basis).

	'Current' farm (system I)	'Improved' farm (system II)	'Further improved' farm (system III)
Milk production (kg ha^{-1})	13195	13195	13195
Number of cows (ha^{-1})	2.3	1.9	1.5
Grass (ha)	22	16	16
Maize (ha)	3	9	6
Fodder-beets (ha)	0	0	3
Purchased fertilizer N (kg ha^{-1})	330	159	91
Purchased fertilizer P (kg ha^{-1})	15	2	3
Purchased concentrates (kg ha^{-1})	4995	2348	1778
Purchased maize silage (kg DM ha^{-1})	2135	0	0
Part of feed energy produced on the farm (%)	57	83	84

Maize is fertilized at 130 kg N ha^{-1}, fodder-beets at 170 kg N ha^{-1}. In both systems, maize is followed by a catch crop to reduce nitrate leaching. Fertilization rates of crops following a catch crop or grassland, are reduced in accordance with the expected increased N mineralization. In system III, utilization of harvestable forage is improved by a two-day rotational grazing scheme.

To reduce feed requirements, annual milk production per cow has been increased from 5 700 kg to 7 000 kg (system II) or 8 500 kg (system III). In 1989, average milk production per cow was already 6 700 kg, so this improvement has been realized partially already on most farms. Increasing milk production to the level of system III cannot be realized at once, but it can be achieved by continuous genetic improvement of the cattle. In system III, the number of calves is reduced to that needed for replacement of milking cows, so meat production is minimized.

Table 3. Measures to reduce nutrient losses on a 'current' Dutch dairy farm on sandy soil.

System components/measures	'Improved' farm (system II)	'Further improved' farm (system III)
Cattle component		
- milk production	• 7 000 kg cow^{-1} yr^{-1}	• 8 500 kg cow^{-1} yr^{-1}
- young stock	• 77% of dairy cows	• 57% of dairy cows
- grazing regime	• only by day	• only by day
		• restricted grazing season
		• rotational grazing from 4 to 2 day
- diet grazing season	• additional maize silage	• additional maize silage
- diet winter season		• fodder-beets and corn cob mix to replace concentrates
Manure component		
- slurry storage	• expanded and covered	• expanded and covered
- method slurry application	• injection	• injection
- time slurry application	• spring and summer	• spring and summer
- stables		• improved floor
		• dung scraper
Soil/crop and forage components		
- fertilizer for grass	• 310 kg N ha^{-1} yr^{-1}	• 235 kg N ha^{-1} yr^{-1}
- fertilizer for maize	• 145 kg N ha^{-1} yr^{-1}	• 130 kg N ha^{-1} yr^{-1}
- catch crop	• after silage maize	• after silage maize
- land use	• more maize	• more maize and fodder-beets

System evaluation

As shown in Table 4, conversion of N intake to milk and meat will increase from 17% to 23% (system II) or 26% (system III). Higher efficiencies could be attained by further adaptations, such as zero-grazing, lower fertilizer rates on grass, higher milk production levels or off-farm rearing of calves. However, most of these adaptations will increase costs of milk production considerably. As a result of improved manure management in the improved systems, a higher proportion of N from the excrements reaches the soil component (82% and 90%, compared to 73% in system I). This results, in combination with the lower

N contents of excrements, in a sharp decline in ammonia losses from manure: from 105 kg N ha^{-1} to 50 kg N ha^{-1} and 21 kg N ha^{-1}, respectively. Similarly, reduced inputs and improved utilization of nutrients lead to a strong reduction in nutrient surpluses from the soil/crop component: from 325 kg N ha^{-1} to 113 kg N ha^{-1} and 77 kg N ha^{-1}, respectively; and from 29 kg P ha^{-1} to 0 kg P ha^{-1} for both systems. Lower fertilization rates on grass, and replacement of grass by fodder crops lead to lower average protein production per hectare but total dry matter production on the farm is hardly affected, because of the higher yields of fodder crops on soils with a limited water-supplying capacity. The adapted grazing system and reduced harvest losses lead to increased utilization of forage nutrients. At farm level, the annual surplus of nutrients already decreases sharply in system II: from 477 kg N ha^{-1} to 191 kg N ha^{-1}; and from 31 kg P ha^{-1} to 0 kg P ha^{-1}. In system III, N losses even decline to 122 kg ha^{-1}, just below the 128 kg ha^{-1} aimed for. Most of the N surplus is lost by leaching and denitrification. In system I, annual leaching is approximately 135 kg N ha^{-1}, and in the improved systems 44 kg N ha^{-1} and 28 kg N ha^{-1}, respectively.

Layout of the prototype system

Based on the initial results of model calculations, system III was selected as the prototype system to be examined on the experimental farm 'De Marke'. The farm area was divided into permanent grassland and two crop rotations, varying in the ratio of grass to arable crops (Figure 2). Most grassland is situated near the farm buildings, favourable from a farm management point of view, as the cows are milked indoors. Nevertheless, arable crops can be alternated with grass, for example to reduce soil-borne diseases. To recover nitrogen mineralized after ploughing the grassland, fodder-beets are grown first, because of their higher N uptake capacity compared to silage maize. Only permanent grassland and grass in rotation I will be irrigated if urgently needed for grazing.

Yields of arable crops are assessed per field. Grass yield is estimated by measuring silage yield and calculating intake of the grazing herd. More detailed information is collected by monitoring the soil-crop system at 28 permanent sites, six of which are monitored intensively. On permanent grassland and on each of the rotations two 'intensive' sites are situated, one on

Table 4. The model-calculated annual nutrient balances (kg ha^{-1} yr^{-1}) of a 'current' Dutch dairy farm on sandy soil, 1983-1986, and of the same farm after (further) improvement.

	'Current' farm (system I)		'Improved' farm (system II)		'Further improved' farm (system III)	
	N	P	N	P	N	P
Cattle component						
Input:						
- purchased feed	178	31	63	12	58	10
- forage	313	42	293	42	234	35
Output:						
- milk	68	12	68	12	68	12
- meat	16	5	12	4	8	2
Output/input	17%	23%	23%	30%	26%	31%
Manure component						
Input:						
- excrements during grazing	191	25	88	11	62	8
- excrements indoors	198	30	185	28	151	23
Output:						
- excrements reaching soil	164	25	76	11	56	8
- manure applied	120	30	147	28	136	23
Input - output	105	0	50	0	21	0
Output/input	73%	100%	82%	100%	90%	100%
Soil/crop component						
Input:						
- excrements reaching soil	164	25	76	11	56	9
- manure applied	120	30	147	28	136	23
- artificial fertilizer	330	15	159	2	91	3
- atmospheric deposition	46	1	45	1	45	1
- returning forage losses	63	6	24	3	19	3
Output:						
- harvestable crop	398	48	338	45	270	38
Input – output:	325	29	113	0	77	0
Output/input	55%	62%	75%	100%	77%	100%

Table 4. Continued

	'Current' farm (system I)		'Improved' farm (system II)		'Further improved' farm (system III)	
	N	P	N	P	N	P
Forage component						
Input:						
- harvestable crop	398	48	338	45	270	38
Output:						
- consumed forage	313	42	293	42	234	35
Input – output	85	6	45	3	36	3
Output/input	79%	87%	87%	93%	87%	93%
Whole farm						
Input:						
- artificial fertilizer	330	15	159	2	91	3
- purchased concentrates	136	25	63	12	58	10
- purchased roughage	42	6	0	0	0	0
- atmospheric deposition	46	1	45	1	45	1
- miscellaneous	7	0	4	0	4	0
Output:						
- milk	68	12	68	12	68	12
- meat	16	5	12	4	8	2
Input – output	477	31	191	0	122	0
Output/input	15%	35%	30%	100%	39%	100%
Volatilization: from manure	105		50		21	
Nitrogen accumulation in soil	30		0		0	
Leaching/denitrification	286		117		82	
Other losses	56		24		19	

a field with a relatively shallow groundwater level, influencing soil water supply to the crop, and one on a field with a deep groundwater level. On the 22 less intensively monitored sites, soil mineral N is measured (in spring and autumn), crop phenological development is estimated (weekly), crop yield and

nutrient contents are quantified (at harvest) and soil fertility is analyzed (every three years). At the intensively monitored sites information is collected more frequently and additional observations include: soil-water content, soil-water tension, groundwater depth, nitrate concentration in drain water and soil temperature. Meteorological data, including rainfall, radiation, relative humidity, wind speed and temperature are recorded near the farm buildings.
Plot experiments, such as varying N fertilization levels, are only acceptable insofar their influence on performance of the prototype system is acceptable. Within that restriction, detailed experiments can provide important information about, for example, N leaching as a function of the fertilization level.

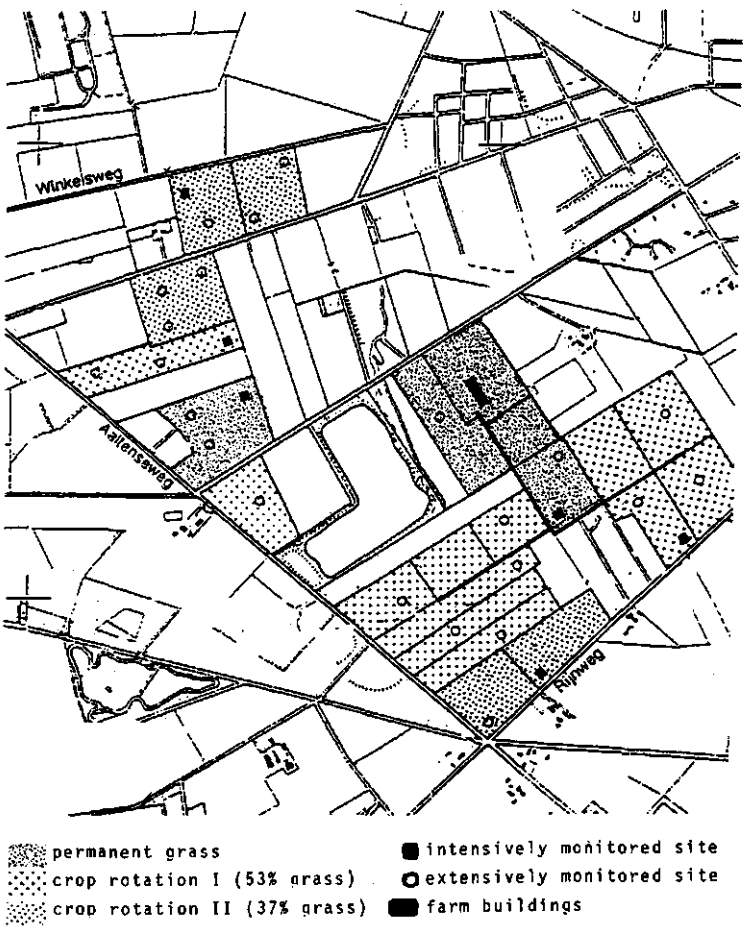

Figure 2. Plan of 'De Marke'

Perspectives

The calculated results for the 'improved' system (II) illustrate that nutrient losses may be reduced considerably by more accurate management and the introduction of an integrated set of cheap and profitable measures into existing farming systems. As the improved system does not fully meet the environmental goals with respect to N, further steps are necessary. However, the performance of system III suggests that environmental standards can be attained, even at a relatively high milk production level per hectare.

From agricultural practice, results have been reported from farms reducing the N surplus within a couple of years by 25-50% (Korevaar, 1992), mainly by better utilization of roughage, hence reduced concentrate input and reduced fertilizer input, partly compensated by better utilization of animal manure.

First steps in farm development towards integrated farming systems seem at least cost-neutral and may even be profitable because of lower inputs. Subsequent steps need more skill and are more expensive. However, preliminary calculations on the financial results of system III suggest an acceptable income, provided milk prices remain stable. Therefore, most dairy farms characterized by average or below-average milk production per hectare have rather favourable prospects. However, farms that are very dependent on purchased feed either have to reduce milk production per hectare or export animal manure. Under present Dutch conditions of substantial manure surpluses, reducing milk production seems the least expensive.

The experimental farm 'De Marke' aims at development of advanced prototypes of integrated farming systems. Subsequently these prototypes will be introduced on commercial farms for testing and further improvement. Introduction of the systems on a large scale requires the support of extension and education, and a stimulating environmental policy. Registration of inputs and outputs of nutrients at farm level was started in the Netherlands in 1990 on a voluntary basis, as a first step. In addition an adequate system of levies and premiums should be introduced to accelerate transition from the current farming systems to integrated systems with due attention to different goals.

Acknowledgements

The authors wish to thank J.J.M.H. Ketelaars, H.G. van der Meer and P. Vereijken (DLO-Centre for Agrobiological Research, Wageningen) for constructive comments on earlier versions of this paper.

References

Aarts, H.F.M., E.E. Biewinga, G. Bruin, B. Edel & H. Korevaar, 1988.
Dairy Farming and Environment. (In Dutch, with English summary). Report 79. Centre for Agrobiological Research, Wageningen, 136 pp.

Bach, W., 1989.
Growing consensus and challenges regarding a greenhouse climate. In: Climate and Food Security, p. 289-305. IRRI, Los Banos, Philippines.

Damen, J., 1978.
Agro-ecosystems in the Netherlands, part 1. In: M.J. Frissel (Ed.), Cycling of mineral nutrients in agricultural ecosystems, p. 70-79. Elsevier Scientific Publishing Company, Amsterdam.

Heij, G.J., J.W. Erisman & J.H. Voorburg, 1991.
Ammonia emissions and abatement. In: G.J. Heij & T. Scheiner (Eds.), Final report (No. 200-09) Dutch priority programme on acidification, p. 37-50. National Institute of Public Health and Environmental Protection, Bilthoven, Netherlands.

Hermans, C. & P.H. Vereijken, 1992.
Integration of animal husbandry and nature conservation on grassland farms. Netherlands Journal of Agricultural Science 40: 301-314.

Janssen, B.H. 1984.
A simple method for calculating decomposition and accumulation of 'young' soil organic matter. Plant and Soil *76: 297-304.*

Kemp, A., O.J. Hemkes & T. van Steenbergen, 1979.
The crude protein production of grassland and the utilization by milking cows. Netherlands Journal of Agricultural Science *27: 37-47.*

Korevaar, H., 1992.
The nitrogen balance of intensive Dutch dairy farms: a review. Livestock Production Science. *31:17-27.*

Korevaar, H. & D.J. den Boer, 1990.
Practical measures to reduce nutrient losses from grassland systems. Proceedings No 301, The Fertiliser Society, London, 34 pp.

Lantinga, E.A., J.A. Keuning, J. Groenwold & P.J.A.G. Deenen, 1987.
Distribution of excreted nitrogen by grazing cattle and its effects on sward quality, herbage production and utilization. In: H.G. van der Meer, R.J. Unwin, T.A. van Dijk & G.C. Ennik (Eds), Animal manure on grassland and fodder crops, p. 103-117. Kluwer Academic Publishers, Dordrecht.

Prins, W.H., K. Dilz & J.J. Neeteson, 1988.
Current recommendations for nitrogen fertilisation within the E.E.C. in relation to nitrate leaching. Proceedings No 276. The Fertiliser Society, London, 27 pp.

Scott, T.W., J.Mt. Pleasant, R.F. Burt & D.J. Otis, 1987.
Contributions of ground cover, dry matter and nitrogen from intercrops and cover crops in a corn polyculture system. Agronomy Journal *79: 792-798.*

Spedding, C.R.W., 1990.
Agricultural production systems. In: R. Rabbinge, J. Goudriaan, H. van Keulen, F.W.T. Penning de Vries & H.H. van Laar (Eds), Theoretical Production Ecology: Reflections and Prospects, Simulation Monographs No 34, p. 239-248. Pudoc, Wageningen.

Spedding, C.R.W., 1988.
An introduction to agricultural systems. Elsevier Applied Science Publishers, London. 189 pp.

Spitters, C.J.T., 1990.
Crop growth models: their usefulness and limitations. Acta horticulturae *267: 349-368.*

Valk, H., W.H. Klein Poelhuis & H.J. Wentink, 1990.
Maize silage or concentrates as supplements in a grass based diet for high yielding dairy cows. (In Dutch, with English summary). Report 213, Institute for Livestock Feeding and Nutrition, Lelystad.

Van Breemen, N., R.A. Burrough, E.J. Velthorst, H.F. van Dobben, T. de Wit, T.B. Ridder & H.F.R. Reijners, 1982.
Soil acidification from atmospheric ammonium sulphate in forest canopy throughfall. Nature *299: 548-550.*

Van der Meer, H.G. & M.G. van Uum-van Lohuyzen, 1986.
The relationship between inputs and outputs of nitrogen in intensive grassland systems. In: H.G. van der Meer, J.C. Ryden & G.C. Ennik (Eds), Nitrogen fluxes in intensive grassland systems, p. 1-18. Kluwer Academic Publishers, Dordrecht.

Van der Meer, H.G., R.B. Thompson, P.J.M. Snijders & J.H. Geurink, 1987.
Utilization of nitrogen from injected and surface-spread cattle slurry applied to grassland.

In: H.G. van der Meer, R.J. Unwin, T.A. van Dijk & G.C. Ennik (Eds), Animal manure on grassland and fodder crops, p. 47-71. Kluwer Academic Publishers, Dordrecht.

Van der Molen, J., D.W. Bussink, N. Vertregt, H.G. van Faassen & D.J. den Boer, 1989. Ammonia volatilization from arable and grassland soils. In J.A. Hansen & K. Henriksen (Eds), Nitrogen in organic wastes applied to soils, p. 185-201. Academic Press, London.

Van Keulen, H. & J. Wolf, 1986. Modelling of agricultural production: weather, soils and crops. Simulation Monographs. Pudoc, Wageningen, 479 pp.

Van Vuuren, A.M. & J.A.C. Meijs, 1987. Effects of herbage composition and supplement feeding on the excretion of nitrogen in dung and urine by grazing dairy cows. In: H.G. van der Meer, R.J. Unwin, T.A. van Dijk & G.C. Ennik (Eds), Animal manure on grassland and fodder crops, p. 17-24. Kluwer Academic Publishers, Dordrecht.

Vertregt, N. & B. Rutgers, 1988. Ammonia volatilization from grazed pastures. Report 84. Centre for Agrobiological Research, Wageningen, 37 pp.

Nu komt de vraag: waar moeten wij de voedingsstoffen halen, die wij bij de bemesting met stalmest tekort komen? In het kringpakhuis van den Boerenbond; en als men nog zo achterlijk is, dat men geen pakhuis heeft, dan kan men te zamen bestellen.

Pastoor H.W. Roes, 1908. Bemesting op zandgrond. Boerenbond Deurne

Phosphorus (P) management in the 'De Marke' dairy farming system

Nutrient Cycling in Agroecosystems (in press)

Phosphorus (P) management in the 'De Marke' dairy farming system

H.F.M. Aarts, B. Habekotté & H. van Keulen

Plant Research International, P.O.Box 16, 6700 AA Wageningen, The Netherlands
(corresponding author: h.f.m.aarts@plant.wag-ur.nl)

Received 5 November 1998, accepted in revised form 14 June 1999.

Abstract

In the sandy regions of the Netherlands water quality is threatened by high losses of nutrients from intensive dairy farms. About 67% (32 kg ha^{-1} yr^{-1}) of farm inputs of P in purchased feeds and fertilisers do not leave in milk or cattle. Dutch government defined decreasing maximum permitted nutrient surpluses for the period 1998-2008, with finally 9 kg ha^{-1} yr^{-1} for P. Farmers suppose that reducing the surpluses will be costly, because it limits application of slurry, which then has to be exported or additional land has to be bought. Moreover, farmers are worried about the impact on soil fertility and crop growth. To explore the possibilities to reduce surpluses by improved management, farming systems research is carried out at prototype farm 'De Marke'. Results indicate that average intensive dairy farms can reduce P surplus sufficiently, without the need to buy land or to export slurry. Key factors are reductions in purchased feeds (by reduced needs per kg milk as a result of a higher milk yield per cow, less young stock and judicious feeding) and fertilisers (by improved management of 'home-made' manure and an increased maize area). Initially, P fertility status of the fields of 'De Marke' decreased, but stabilised in the seventh years at a level not restricting crop production.

Keywords:

phosphorus, P, dairy farming, systems research, environment, pollution, soil fertility, sandy soils

Introduction

Dairy farming is the major sector of Dutch agriculture, occupying 64% of its 2 million hectares farmland (Van der Molen *et al.*, 1998). In the sixties and seventies, farms strongly intensified through increasing purchases of fertilisers and feeds, resulting in higher milk production per hectare. Although national milk production decreased by 15%, following introduction of the milk quota system in 1984, dairy farming is still intensive, especially in the sandy regions (630,000 ha), with an average milk production of 12,400 kg $ha^{-1}yr^{-1}$, 500 kg above the national average (Beldman & Prins, 1999).

At farm level, intensification has led to a serious imbalance between inputs of nutrients (in purchased fertilisers and feeds and atmospheric deposition) and outputs (mainly milk and meat). In the mid-eighties, outputs represented on average only 33% of the inputs for phosphorus (P) and 14% for nitrogen (N) (Aarts *et al.*, 1992). The surplus of 32 kg P $ha^{-1}yr^{-1}$ - farm inputs minus outputs – accumulates in the soil until saturated, after which it affects groundwater quality directly through leaching, and that of surface water indirectly through drainage of groundwater (Oenema & Roest, 1998). Because of its geographical position, surface runoff hardly contributes to the transport to surface water in the Netherlands. The N surplus (470 kg $ha^{-1}yr^{-1}$) is lost largely through denitrification, leaching of nitrate and volatilisation of ammonia.

From 1987 onwards, the Dutch government has taken measures to reduce pollution, first by eliminating excessive use of animal manure. As a result, nutrient surpluses decreased, but nevertheless remained unacceptably high (De Walle & Sevenster, 1998). Subsequently, decreasing maximum permitted surpluses of P and N were defined for the period 1998-2008, with a final value of 9 kg $ha^{-1}yr^{-1}$ for P (Table 1). Mineral accounting is compulsory and surpluses above the defined levels are levied (Van den Brand & Smit, 1998). The defined surpluses are compromises between agricultural and environmental demands. To maintain an agriculturally optimum soil fertility level, data from field experiments and farming practice suggest a required supply in excess of crop uptake of 10 to 30 kg P $ha^{-1}yr^{-1}$, to compensate for fixation and immobilisation. Based on the average precipitation surplus of 300 mm and Dutch groundwater quality standards (maximum of 0.40 mg P l^{-1}), a loss of only 1.2 kg P $ha^{-1}yr^{-1}$ would be acceptable from an environmental point of view (Van der Molen *et al.*, 1998).

Table 1. Maximum acceptable nutrient surpluses in the Netherlands (kg ha^{-1} yr^{-1}, deposition and fixation by clover not included; Van den Brand and Smit, 1998).

	1998	2000	2002	2005	2008
N					
- grassland	300	275	250	200	180
- arable land	175	150	125	110	100
P					
- grassland	17	15	13	11	9
- arable land	17	15	13	11	9

Farmers anticipate that reducing P surpluses will lead to high costs, because it limits slurry application and surplus slurry has to be exported or applied on additional land. Moreover, farmers are worried about the impact of reduced surpluses on soil fertility and on crop growth, because of reduced fertilisation levels.

The goal of farming systems research is to develop guidelines for farmers to improve management, taking into account farm objectives and farm conditions. In addition, the government needs information on the practical feasibility of measures, aiming at reducing environmental pollution. This paper describes the results of systems research, aiming at development of intensive dairy farming systems on sandy soils with low levels of P surpluses, by improved management.

Research approach

Characteristic for dairy farming systems is the combination of plant and animal production. By exchanging manure and forage between the plant and animal components, nutrients cycle through the system, unavoidably leading to losses. Single nutrient flows can be influenced, but intervening in one step of the cycle may affect nutrient flows elsewhere. Therefore, whole farm research taking into account interactions and overall effects of measures is needed to identify attractive options to reduce losses (Jarvis *et al.*, 1996). However, that presents two major methodological problems. Firstly, the 'experiment' cannot be

replicated, because of specific farm conditions. Secondly, these specific conditions limit extrapolation of results to other farms.
An attractive solution to these problems is to combine system modelling and system prototyping. Modelling is used to combine knowledge and to generate systems that, in theory, can realise farm objectives. Prototyping at farm scale is needed to validate these theoretical systems and the underlying models (Vereijken, 1992). A prototype can be demonstrated and discussed with farmers during visits, stimulating introduction of improvements on commercial farms and generating new ideas for improvement of the prototype. Improved models can be used as tools by advisory services to assist in adapting commercial farms to changes in environmental and production constraints.

System modelling

Modelling started in 1987 by analysing system characteristics, nutrient flows and management of commercial dairy farms, to gain insight in the functioning of the system, identify options for improvements and create a reference point for improved farming systems. Simple, transparent models have been applied to describe and integrate the main components of the dairy farming system. They included calculation of the effects of fertiliser and moisture supply on crop growth and the associated nutrient flows, and of the effects of diet composition on milk production and excretion of nutrients in urine and faeces. Results of modelling were discussed in detail with specialists, which often resulted in adaptation of the models (Aarts *et al.*, 1992).

Table 2. Targets for nutrients at farming system 'De Marke'.

Characteristic	Maximum value
Ammonia volatilisation	30 kg N $ha^{-1}yr^{-1}$ from manure
Nitrate leaching	50 mg nitrate l^{-1} in upper ground water
N surplus	128 kg N $ha^{-1}yr^{-1}$, deposition and fixation by clover included
P leaching	0.15 mg P l^{-1} in upper ground water
P surplus	0.45 kg P $ha^{-1}yr^{-1}$, deposition included

The set of models was used to design a number of farming systems, in theory realising strict environmental goals (Table 2), and suitable for average intensive dairy farms in sandy regions. These environmental goals are much more ambitious than those set for commercial farms by government regulations. The main reasons are that the latter do not always guarantee attainment of the desired environmental quality and problems associated with realising environmental goals will come to the fore earlier and more pronounced. For the maximum P concentration in groundwater the threshold value of surface water (0.15 mg l^{-1}) was chosen instead of the generally used value of 0.40. On the basis of the average precipitation surplus, this leads to a maximum surplus of 0.45 kg P $ha^{-1}yr^{-1}$.

System prototyping

The site

The prototype system was implemented on the experimental farm 'De Marke', located in the East of the Netherlands on light sandy soil. In 1989 the land was acquired and has been used since as intended. However, until 1992 no cattle were present and no organic fertilisers were used. The land comprising the farm was reclaimed from heather at the beginning of the 20th century. An upper layer of 25 to 30 cm, with an organic matter content of on average 4.8%, overlies a layer of humusfree sand. Groundwater table depth is 1 to 3 m below soil surface. As a result, soil water-supplying capacity is only 50 mm on most of the land. This light sandy soil location was deliberately selected, as environmental problems tend to be most pronounced here and appropriate nutrient management most difficult. Farm size is 55 ha, about twice the current average farm size in sandy regions, but almost equal to the expectation of the Dutch Farmers Union for the year 2010. Implementation of the prototype system was completed in 1992.

Layout of the prototype system

In Table 3 the main characteristics of the prototype system are compared with those of the 'average' commercial farm on sandy soils in the mid-eighties. The proportion of the farm area used as grassland is much lower, and that of maize consequently higher, on the prototype system. The main reason is the demand

for feed with a low protein content, to compensate for the rather high contents of the grass products in the ration. Moreover, the water and fertiliser requirements of grass, are much higher than those of maize. Even so, the area of grassland at 'De Marke' still exceeds that of maize, because of its possibilities for grazing and the opportunity to apply more animal manure per unit area.
The farm area is divided in permanent grassland and two crop rotations. In crop rotation I, a three years grassland period is followed by three years arable cropping, in crop rotation II by five. Until 1995, fodder beets were grown in the first year after a grass period, followed by maize. Since then, maize is the only arable crop, because it appeared more attractive in feeding, and the risk of excess nitrate leaching in the first arable year (decaying grass sod) could be avoided by omitting fertiliser application. Italian ryegrass is sown between the maize rows, acting as a catch crop by taking up soil nitrate surplus during ripening and after maize harvest (Aarts, 1996). On most commercial farms fields

Table 3. Main characteristics of 'De Marke' (1994-1997) and of commercial farms on sandy soils (1983-1986).

	'De Marke'	Commercial farm
Cattle		
- Milk production (kg ha^{-1})	11890	12798
- Number of cows (ha^{-1})	1.45	2.31
- Number of calves (cow^{-1})	0.70	0.76
- Purchased feed (kg dry matter ha^{-1})	2015	6183
- Feed produced on the farm (% of dry matter)	84	62
- Grazing season	1/5–1/10	1/5-1/11
- Daily grazing time (hours)	8	16
Soil and crops		
- Grassland (%)	55	90
- Maize land (%)	45	10
- Mineral N fertilisers (kg ha^{-1})	72	331
- Mineral P fertilisers (kg ha^{-1})	0	15
- Crop rotation	Yes	No
- Catch crop after maize	Yes	No

are used continuously either for growing maize or grass and a catch crop is not common. The permanent grassland and the area of crop rotation I, comprising about 70% of the total farm area and situated rather close to the farm buildings, can be irrigated if urgently needed. On average, 100 mm yr^{-1} has to be applied on grassland, on maize 25 mm.

Slurry contains on average 0.49 kg P and 1.92 kg plant-available N m^{-3}. Permanent grassland, leys and maize land receive 49, 72 and 26 m^3 ha^{-1} yr^{-1}, respectively. Hence, 75% of the slurry is applied to grassland. No mineral P fertilisers have been applied since 1994. Mineral N fertilisers are applied to grassland only, on average 124 kg $ha^{-1}yr^{-1}$.

The farm milk quota is 658,000 kg yr^{-1} at 4.33% milk fat, somewhat lower per hectare than the average in sandy regions but close to the national average. About 80 dairy Holstein Friesian cows are accommodated in a cubicle house with low ammonia emission characteristics. Milk yield is 8,200 kg cow^{-1} yr^{-1}, considerable higher than on commercial farms (5,500 kg), so that feed requirements per kg milk are lower. Young stock is only kept for replacement. Composition of the feed rations aims at maximising the conversion of nutrients in the feed into milk and body weight. In summer, the dairy cattle are allowed limited grazing time for two periods of 4 hours daily, with an intermediate resting time indoors ('siesta grazing'). During this period and during the night, the cows are fed silage maize. This feeding regime results in an even distribution of intake of grass (high-protein) and maize (low-protein) products. Furthermore, there is a short rotational grazing system (to restrict grazing losses) and early housing, i.e. 1st October at the latest. Non-lactating cows are stall-fed. On commercial farms daily grazing time is twice as long, and the grazing season one month longer.

Data collection and system analysis

Since the prototype system is unique, the results can not be evaluated statistically in the conventional way. Therefore, results of an extensive monitoring program and additional disciplinary research are used to quantitatively describe the functioning of the system.

Where feasible, mass flows containing P (like harvested crops, applied slurry or purchased concentrates) are quantified by weighing. P contents of crops, slurry and feeds are determined colorimetrically after destruction with sulphuric acid following drying at 105 °C. Yields of maize and grass silage are assessed per plot

by weighing the whole crop prior to silage making. Fresh grass consumption by cattle is estimated per plot by determining standing biomass just before and directly after grazing, taking into account growth during grazing.
At the end of the year, the upper groundwater is sampled by the National Institute of Public Health and Environment (RIVM) at 137 points, distributed proportionally per field on the basis of acreage. Bore holes are made up to 0.8 m below the ground water table. Water, sampled with a well-screen and using a suction pump, is directly filtered and acidified with sulphuric acid. P concentration is determined colorimetrically (Fraters *et al.*, 1998).
In 1989, and annually from 1994 onwards, soil samples of the rooted zone (0-30 cm) were taken in the winter period to determine nutrient contents and soil fertility status (Habekotté *et al.*, 1998). For that purpose, the farm was divided into 51 blocks of about 1 ha each. In each block, 40 cores were taken for each composite soil sample. Total and plant-available soil P were determined (Table 4). Plant-available P was expressed as Pw for arable crops (Van der Paauw, 1971), and P-Al for grassland (Van der Paauw, 1956).
Feed intake indoors is measured by weighing, sampling and analysing all feed entering the stable. P excreted in the stable is determined as slurry volume applied on the farm area, multiplied by P content, taking into account mutations in the slurry in storage. P in faeces and urine excreted during grazing is estimated from the input in feeds by subtracting output in milk and meat and excretion indoors.

Table 4. Soil analyses for P.

P-test	Method	Unit	Reference
Pw	1:60 (volume/volume), extraction with water, 22 h incubation, 1 h shaking	mg P_2O_5 per litre soil	Van der Paauw, 1971
P-Al	1:20 (dry weight/volume), extraction with 0.1 ammonium lactate+0.02 m hydrochloric acid, pH 3.7, 1.5 h shaking	mg P_2O_5 per 100 g dry soil	Van der Paauw, 1956
Total P	Destruction with Fleischman acid; spectrophotometric determination, following coloring with ammonium molybdate, antimone and ascorbic acid	mg P_2O_5 per 100 g dry soil	Murphy & Riley, 1962

Results

Phosphorus flows

The main P flows in system 'De Marke' for the period 1993-1996 are presented in Table 5 and Figure 1. For comparison, the flows are given of an 'average' commercial farm in the mid-eighties, the moment Dutch government introduced legislation to reduce nutrient losses and introduction of the milk quota system stopped further intensification. First, the flows for the farm as a whole will be discussed and subsequently for the components 'cattle' and 'soil/crops'.

Whole farm

It was anticipated that P surplus would decrease from 31.9 kg $ha^{-1}yr^{-1}$ (commercial farm) to 0 (model calculations). Average surplus realised was 4.5 kg $ha^{-1}yr^{-1}$ and was decreasing with time (Table 5). Input of P in purchased feed is 62% below that of the commercial farm, but substantially higher than anticipated. To compensate for this higher input, application of inorganic fertiliser was discontinued in spring of 1994. In addition to the large quantities of available 'home-made' organic P fertiliser, commercial farmers buy considerable amounts of inorganic P fertilisers. Total input at 'De Marke' is only 37% of that at the commercial farm. Output is somewhat lower, as a result of the slightly lower milk production per hectare and a smaller number of animals sold. Efficiency of P utilisation of the farming system (74%) - defined as output divided by input - was considerably higher than on commercial farms (33%), but lower than anticipated (100%).

Cattle component

P intake by cattle in feed was on average 9% higher and P yields of the crops 8% lower than calculated. As a result, the fraction of purchased P in total intake was 28% instead of 15. P in feed is used more efficiently than on commercial farms: 30% is recovered in milk and meat, compared to 22% on commercial farms. P requirements of bovine animals have been established at 3 to 4 g kg^{-1} dry matter intake (Lynch & Caffrey, 1997). P-consumption on 'De Marke' was on

a: 'De Marke'

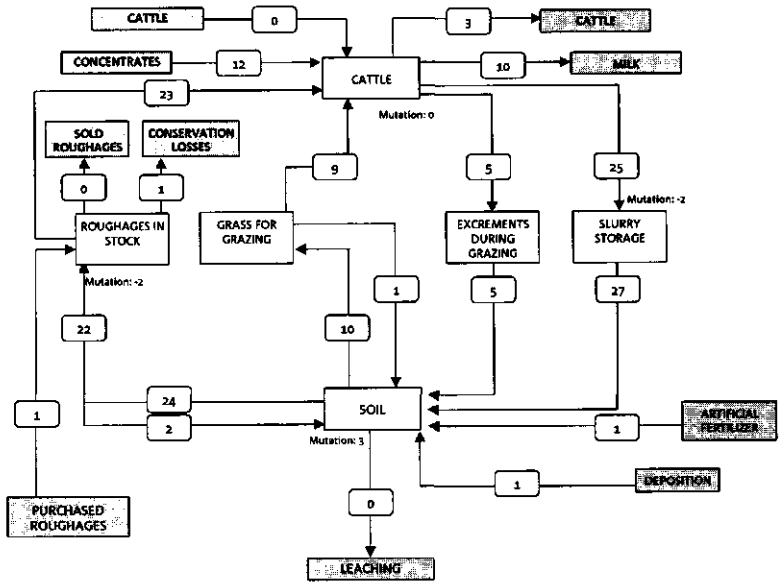

b: Commercial farm

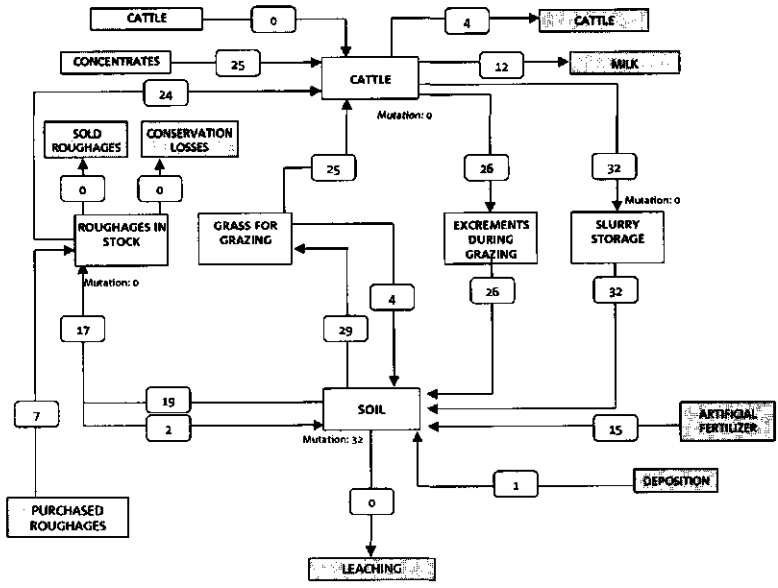

Figure 1. P-cycle of a: 'De Marke' (average 1993-1996) and b: a commercial farm in the middle of the eighties (kg P ha^{-1})

Table 5. P-budgets as model calculated (prognoses) and realised for 'De Marke' and for a commercial farm in the mid-eighties (kg ha^{-1} yr^{-1}).

		'De Marke'				com. farm
	Prognoses	93/94	94/95	95/96	Average	1983/1986
Cattle component						
Input:						
- Purchased feed	5.9	13.8	11.5	11.7	12.3	32.0
- Homegrown feed	34.2	33.3	32.3	29.1	31.6	42.0
Total	40.1	47.1	43.8	40.8	43.9	74.0
Output:						
- Milk	10.6	10.5	10.6	9.7	10.3	12.0
- Meat	2.2	3.2	2.6	2.5	2.8	4.0
- Urine and dung patches (grazing)	7.0	7.7	3.3	4.8	5.3	26.0
- Excrements indoors (slurry)	20.2	24.7	27.1	23.8	25.2	32.0
Total	40.0	46.1	43.6	40.8	43.5	74.0
Milk and meat as % of input	32	29	30	30	30	22
Soil/crop component						
Input:						
- Urine and dung patches	7.0	7.7	3.3	4.8	5.3	26.0
- Slurry	20.2	25.8	33.5	22.8	27.4	32.0
- Artificial fertiliser	6.0	1.8	0.0	0.0	0.6	15.0
- Atmospheric deposition	0.9	0.9	0.9	0.9	0.9	0.9
- Recycled forage losses	3.1	2.5	2.6	2.4	2.5	6.0
Total	37.2	38.7	40.3	30.9	36.6	79.9
Output:						
- Harvestable crop	37.3	35.2	34.5	30.7	33.5	48.0
Harvestable crop as % of input	100	91	86	99	91	60
Whole farm						
Input:						
- Artificial fertiliser	6.0	1.8	0.0	0.0	0.6	15.0
- Purchased feed	5.9	13.8	11.5	11.7	12.3	32.0
- Atmospheric deposition	0.9	0.9	0.9	0.9	0.9	0.9
- Miscellaneous*	0.0	3.3	5.6	2.1	3.7	0.0
Total	12.8	19.8	18.0	14.7	17.5	47.9
Output:						
- Milk	10.6	10.5	10.6	9.7	10.3	12.0
- Meat	2.2	3.2	2.6	2.5	2.8	4.0
Total	12.8	13.7	13.2	12.2	13.0	16.0
Input – output	0.0	6.1	4.8	2.5	4.5	31.9
Output as % of input	1.00	0.69	0.73	0.83	0.74	0.33

* *mainly decreases in stocks of feed and slurry*

average 3.5 g kg^{-1}, 10% above the individual minimum requirements of the animals. Requirements of lactating cows were exceeded by 1 (summer) and 11% (winter), of non-lactating cows by 25% (summer and winter) and of young stock by 41 (summer) and 6% (winter). The main reasons are the very low P requirements of non-lactating cows, continuous grazing of young stock (high P content of grass) and the limited possibilities for individual feeding (Van der Schans, 1998).

The quantities of P in faeces and urine produced in excess of those anticipated, ended up in slurry. Manure production at pasture was even somewhat lower than model calculated. By restricting grazing time at 'De Marke', excretion of P at pasture was on average only 17% of the total, compared to 45% for the commercial farm. Excretion during grazing will lead to spatially uneven distribution of P (in dung patches). Applying excreted P as slurry results in even distribution, stimulating re-use by crops.

Soil/crop component

Total P-supply to the soil was similar to the prediction at 46% of that on the commercial farm. About 75% of this input originated from slurry (40% at the commercial farm), higher than anticipated, because of the higher excretion indoors and a restricted use of inorganic fertilisers. P in the harvestable parts of crops was somewhat lower than predicted, mainly because of lower yields as a result of below-average rainfall in the growing seasons. P-contents of fresh grass, grass silage (both 4.0 g kg^{-1} dry matter), and maize silage (1.9 g kg^{-1} dry matter) were similar to those on commercial farms (Van der Schans, 1998). Average P-yield per ha was considerably lower, compared to the commercial farm, as a higher proportion of land was used for maize. On average, 3.1 kg P $ha^{-1}yr^{-1}$ was not recovered in harvestable products, compared to 31.9 kg at the commercial farm. The efficiency of the soil/crop component of the system was 91%, compared to 60% for the commercial farm.

Soil fertility and crop production

Between 1989 and 1997 the P-surplus of the 51 blocks was 2 kg $ha^{-1}yr^{-1}$ on average (Habekotté *et al.*, 1998). Soil fertility status, expressed in Pw and P-Al decreased until 1995/96, by on average 26% and 15%, respectively (Fig. 2). As total soil P decreased on average by only 3%, it must be concluded that P

solubility has declined. From 1995/96 onwards, average levels of Pw and P-Al did not show a further decrease and the P-status of blocks, originally in the lowest two classes, even seems to increase. Between 1989/90 and 1997/98, the number of blocks in the class 'high' has decreased, but none of the blocks had attained a fertility status below 'sufficient' at the end of that period (Figure 3).
As maize is considered more sensitive to low soil P-status than grass, P-fertiliser trials were conducted in maize fields with the lowest P-status. In these trials, maize yield did not respond to additional P fertiliser, even though initial growth seemed to be stimulated (Schröder & Ehlert, 1998).
In the period 1992-1996 annual average crop yields varied between 8,000 and 9,600 kg dry matter ha^{-1} for grass and between 9,000 and 11,400 for maize. No significant relation was found between P-status of the soil and maize and grass yields. Occasionally, however, P-content of maize tended to be lower than expected under optimum availability of P. Uptake may have been restricted through the combined effect of low P-fertilisation and drought periods. In general, the growth factors water and N availability appeared to be most yield-limiting (Habekotté & Hilhorst, 1998; Schröder & Ehlert, 1998).

P in the upper groundwater

As shown in Table 6, average P content of the upper groundwater at 'De Marke' was in all years well below the maximum acceptable value (0.15 mg l^{-1}). In 1993, it was more than double the average for the period 1990-1997. In that year, a period of heavy rainfall caused shallow groundwater levels, occasionally reaching the rooted zone. Locations where groundwater table depth was less than 80 cm showed clearly higher P contents. In about 12% of the samples of 1993 the threshold value of 0.15 mg l^{-1} was exceeded and in 2% the value of 0.40 mg l^{-1} (generally used threshold value for groundwater).

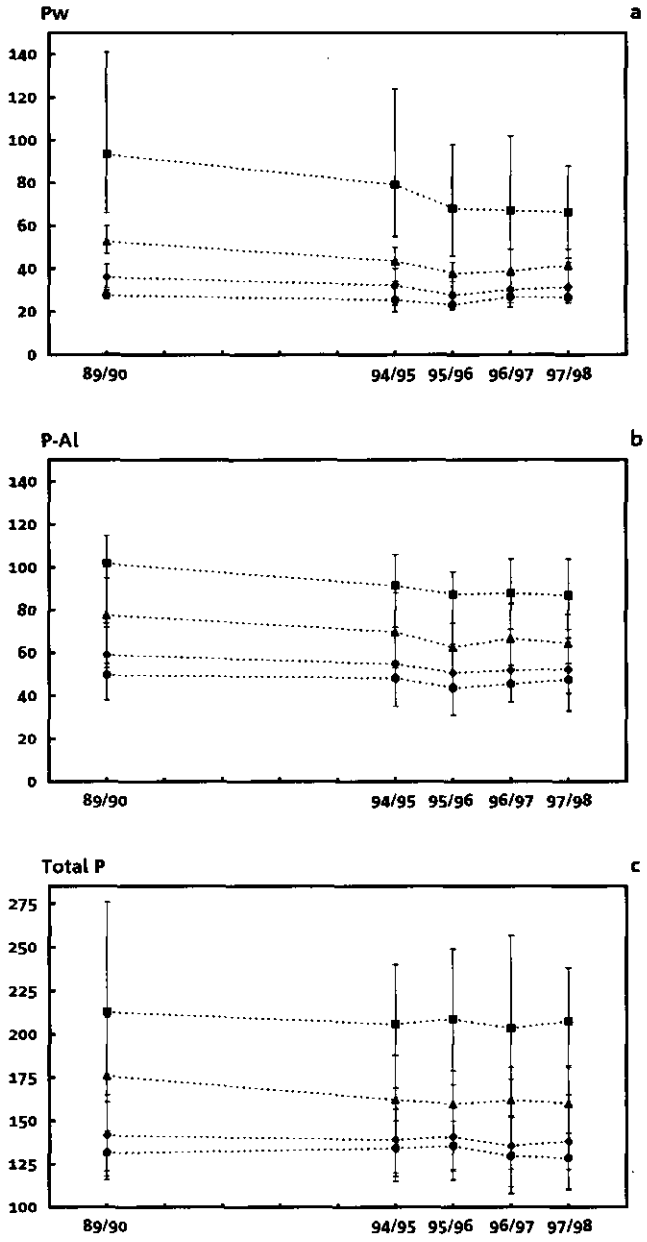

Figure 2. P-status of the soil. Blocs initially in a common soil fertility class with respect to Pw have been combined. ●: sufficient (21-30 mg P_2O_5 per litre soil) ; ♦: ample (31-45), ▲: fairly high (46-60), ■: high (>60). a: Pw, the Dutch indicator for soil fertility for arable crops; b: P-Al, the indicator for grassland; c: Total P

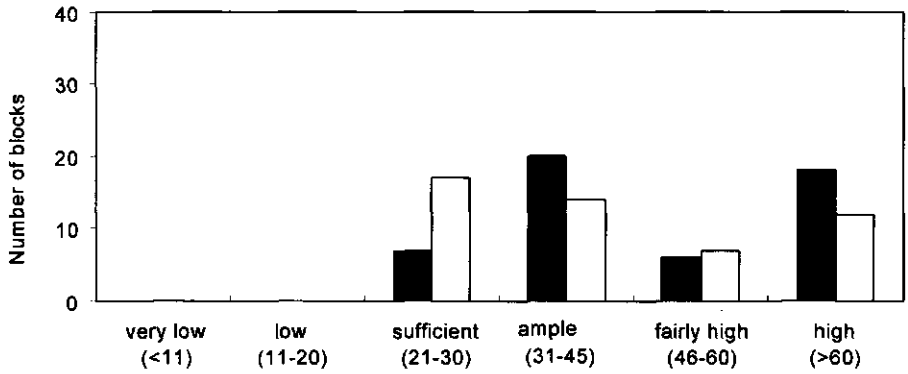

Figure 3. The number of blocks initially (1989/90: black columns) and finally (1997/98: blank columns) in the defined Pw soil fertility classes (mg P_2O_5 per litre soil).

Table 6. Groundwater depth (cm below surface) and P content (mg l^{-1}) of the upper groundwater below 'De Marke': mean ± standard deviation.

Year	Ground water depth	P content
1990	280 ± 26	0.040 ± 0.053
1992	230 ± 33	0.008 ± 0.013
1993	80 ± 36	0.060 ± 0.109
1994	210 ± 55	0.013 ± 0.031
1995	270 ± 54	0.010 ± 0.019
1996	290 ± 41	0.018 ± 0.034
1997	260 ± 31	0.017 ± 0.046
Average	*231 ± 40*	*0.024 ± 0.044*
1993 32 samples	> 100	0.025 ± 0.051
1993 36 samples	80 – 100	0.021 ± 0.027
1993 45 samples	50 – 80	0.096 ± 0.160
1993 24 samples	< 50	0.100 ± 0.090

Discussion

Systems research was initiated, because farmers have insufficient insight in attractive ways to reduce P surplus to the levels defined by government, and because of uncertainty about the impact on soil fertility, crop growth and water quality. To reach definite conclusions, a much longer research period is needed, as obviously most of the characteristics are still in transition. However, the research results obtained sofar present indications, and can serve to guide the discussion, both for the farmers and for policy makers.

Can commercial farmers reduce their P surplus from an average of 32 kg $ha^{-1}yr^{-1}$ to 9 kg finally, without the necessity to export slurry or to buy land? The surplus at prototype system 'De Marke' was on average 4.5 kg P $ha^{-1}yr^{-1}$ and milk production 11,890 kg $ha^{-1}yr^{-1}$. P-content of milk was 1.12 g kg^{-1} and the utilisation efficiency of P in feed for milk production 30%. Hence, to produce 1 kg of milk, 3.7 g P was consumed. Feed required for additional milk production has to be purchased. Assuming a constant marginal P-utilisation efficiency, additional milk production will increase the surplus by 2.58 g P kg^{-1}, the difference between input in purchased feed (3.70 g kg^{-1}) and output in milk (1.12 g kg^{-1}). Hence, maximum milk production per ha can be calculated at the P surpluses, defined by the government for 1998-2008 and the technical results of 'De Marke' (Table 7). Results show that acceptable P surpluses can be combined with above average milk production levels per hectare and even rather intensive farms can avoid levies or costs for export of slurry, by improving management. The main measures required are reducing input of P: in purchased feed through a reduced number of animals (to be achieved through increased milk production per cow) and more judicious feeding, and in mineral fertiliser by improved manure management and an increased area of maize. However, such management demands skilled farmers. As the land of 'De Marke' is very drought-sensitive and irrigation possibilities restricted, on most farms higher crop yields are attainable, reducing the need for purchased feeds. Consequently, higher milk production levels per hectare can be realised as presented in Table 7, or the same levels can be attained with less judicious management, for instance resulting in lower P efficiency in feeding than at 'De Marke'.

Table 7. Maximum milk production (kg ha^{-1} yr^{-1}), assuming no export of slurry, and management comparable to system 'De Marke'.

Period	Max. surplus (kg P ha^{-1}yr^{-1})	Max. milk production
1998 - 2000	17	16,886
2000 - 2002	15	16,045
2002 - 2005	13	15,200
2005 - 2008	11	14,359
> 2008	9	13,517

At 'De Marke', P-surplus has to be further reduced from 4.5 to 0.45 kg ha^{-1}, in first instance by further improved management. Scope for further reduction may be found in the surplus of 10% in the P consumption of cattle. If that appears not feasible, the target surplus could be attained by reducing input in feed, reducing milk production by 1,569 kg ha^{-1} (1,569 kg ha^{-1} x 2.58 g kg^{-1}= 4.05 kg P ha^{-1}), resulting in a milk production level of 10,320 kg ha^{-1}.

Do reduced P surpluses threaten soil fertility status and crop yield? The reduced P surplus at 'De Marke' resulted in lower soil fertility status, expressed as Pw and P-Al, during the first years by 26% and 15%, respectively, but it seems to stabilise in the seventh year. Up till now, the observed decrease in soil P-status has not resulted in lower crop yields and, despite the speculative character of most soil-P models (Schoumans, 1997; Schoumans *et al.*, 1997), serious problems are not expected in the next decades (Schoumans, 1998). However, model calculations suggest that at realisation of the target surplus of 0.45 kg ha-1, the plots currently at Pw-status 'sufficient' will reach a status 'low' within 10 to 40 years (Schoumans, 1998) and judicious manure management will be essential to maintain crop production. In general, the maximum levy-free P surpluses will not lead to agriculturally sub-optimal soil fertility levels or reduced crop yields and therefore will not have serious consequences for farm performance.

Does a low P-surplus guarantee acceptable groundwater quality? P-concentration in the upper groundwater at 'De Marke' appears to be very low, even in fields with a high P content in the upper soil layers. P leached from these layers is fixed in the subsoil before reaching the groundwater. At very low P surplus, saturation of the subsoil is not likely. However, Dutch policy aims at higher

groundwater levels, to reduce drought damage to nature reserves and agriculture and to allow continued groundwater extraction for drinking water. The upper layers of sandy soils are often P saturated. Shallow groundwater tables can therefore result in P-concentrations in the water above the acceptable level.

Conclusions

Rather intensive dairy farms on sandy soil can realise the required levels of maximum permitted P-surpluses without the necessity to export slurry or to buy land. However, improved management resulting in strongly reduced inputs of feeds and fertilisers is essential. Maximum permitted P-surpluses do not threaten soil fertility or crop yield, if utilisation of 'home-made' manure is optimised. Shallower groundwater levels, to reduce drought damage, may increase P contents in groundwater to unacceptable levels. Hence, again, a systems approach should be applied, where modifications in one characteristic of the system may have undesirable consequences for other characteristics.

Literature

Aarts, H.F.M., 1996.
Efficient nutrient management in dairy farming on sandy soils. Technical results of the experimental farm De Marke for the years 1993/94 and 1994/95. Report 67, Research Institute for Agrobiology and Soil Fertility (AB-DLO), Wageningen.

Aarts, H.F.M., E.E. Biewinga & H. Van Keulen, 1992.
Dairy farming systems based on efficient nutrient management. Neth J Agric Sci *40: 285 – 299.*

Beldman, A.C.G. & H. Prins, 1999.
Differences in nutrient surpluses between specialised dairy farms (1996/1997). Report 2.99.01 LEI-DLO, Den Haag (In Dutch.)

De Walle, F.B. & J. Sevenster, 1998.
Agriculture and the Environment; minerals, manure and measures. Kluwer Academic Publishers, Dordrecht.

Fraters, D., L.M.J. Boumans, G. Van Drecht, T. De Haan & D.W. De Hoop, 1998.
Nitrogen monitoring in groundwater in the sandy regions of the Netherlands. In: K.W. Van

der Hoek, J.W. Erisman, S. Smeulers, J.R. Wisniewski & J. Wisniewski (eds.). Proc. 1st Intern. Nitrogen Conf. pp. 479-485. Noordwijkerhout, The Netherlands.

Habekotté, B. & G.J. Hilhorst, 1998.
Yield and quality of maize, related tot the P status of the soil at De Marke. In: B. Habekotté, H.F.M. Aarts, W.J. Corré, G.J. Hilhorst, H. Van Keulen, J.J. Schröder, O.F. Schoumans & F.C. Van der Schans (eds.). Sustainable dairy farming and P management. AB-DLO rapport nr 92, pp 65-85. Wageningen (In Dutch).

Habekotté, B., W.J. Corré & G.J. Hilhorst, 1998.
The P status of the soil at De Marke. In: B. Habekotté, H.F.M. Aarts, W.J. Corré, G.J. Hilhorst, H. Van Keulen, J.J. Schröder, O.F. Schouman & F.C. Van der Schans (eds.). Sustainable dairy farming and P management. AB-DLO rapport nr 92, pp 29-46. Wageningen (In Dutch).

Jarvis, S.C., R.J. Wilkins & B.F. Pain, 1996.
Opportunities for reducing the environmental impact of dairy farming management: a system approach. Grass and Forage Sci *51: 21-31.*

Lynch, P.B. & P.J. Caffrey, 1997.
Phosphorus requirements for animal production. In: H. Tunney, O.T. Carton, P.C. Brookes & A.E. Johnston (eds.). Phosphorus loss from soil to water, pp 283-296. CAB International, UK, Oxon.

Murphy, J. & J.P. Riley, 1962.
A modified single solution method for the determination of phosphate in natural waters. Anal Chim Acta *27: 31-36*

Oenema, O. & C.W.J. Roest, 1998.
Nitrogen and phosphorus losses from agriculture into surface waters; the effects of policies and measures in the Netherlands. Wat Sci Tech *37: 19-30.*

Schoumans, O.F., 1998.
Effects of low P surpluses on the P status of the soil. In: B. Habekotté, H.F.M. Aarts, W.J. Corré, G.J. Hilhorst, H. Van Keulen, J.J. Schröder, O.F. Schoumans & F.C. Van der Schans (eds.). Sustainable dairy farming and P management. AB-DLO rapport nr 92, pp 47-63 Wageningen (In Dutch).

Schoumans, O.F., 1997.
Relation between phosphorus accumulation, soil P levels, and phosphorus leaching. DLO Winand Staring Centre for Integrated Land, Soil and Water Research, Report 146, Wageningen.

Schoumans, O.F., P.A.I. Ehlert & A. Breeuwsma, 1997.
Phosphorus testing and management: towards a more fundamental and environmentally sound approach. Proceedings 1997 International Soil and Plant Analysis Symposium, pp 64-80. Minneapolis, Minnesota, USA.

Schröder, J.J. & P.A.I. Ehlert, 1998.
P management and maize growth. In: B. Habekotté, H.F.M. Aarts, W.J. Corré, G.J. Hilhorst, H. Van Keulen, J.J. Schröder, O.F. Schoumans & F.C. Van der Schans (eds.). Sustainable dairy farming and P management. AB-DLO rapport nr 92, pp 87-99. Wageningen (In Dutch).

Van den Brandt, H.P. & H.P. Smit, 1998.
Mineral accounting: the way to combat eutrophication and to achieve the drinking water objective. Env Poll *102: 705-709.*

Van der Molen, D.T., A. Breeuwsma & P.C.M. Boers, 1998.
Agricultural nutrient losses to surface water in the Netherlands: impact, strategies and perspectives. J Environ Qual *27: 4-11.*

Van der Paauw, F., 1956.
Calibration of soil test methods for the determination of phosphate and potash. Plant Soil *8: 105-125.*

Van der Paauw, F., 1971.
An effective water extraction method for the determination of plant-available soil phosphorus. Plant Soil *34: 467-481.*

Van der Schans, F.C., 1998.
P in animal feeding at De Marke. In: B. Habekotté, H.F.M. Aarts, W.J. Corré, G.J. Hilhorst, H. Van Keulen, J.J. Schröder, O.F. Schoumans & F.C. Van der Schans (eds.) Sustainable dairy farming and P management. AB-DLO rapport nr 92, pp 101-126. Wageningen (In Dutch).

Vereijken P., 1992.
A methodic way to more sustainable farming systems. Neth J Agric Sci *40: 209-223.*

Waardoor bederft stalmest? Ten eerste door blootstelling aan de buitenlucht. Wordt 'rauwmest' gedurende de zomermaanden in de open lucht bewaard, dan gaat 1/3 deel of nog meer van de dure stikstof verloren. Wil men mest buiten bewaren, dan overdekt men hem met een laagje vetten grond.

Pastoor H.W. Roes, 1908. Bemesting op zandgrond. Boerenbond Deurne

Nitrogen (N) management in the 'De Marke' dairy farming system

Nutrient Cycling in Agroecosystems (in press)

Nitrogen (N) management in the 'De Marke' dairy farming system

H.F.M. Aarts, B. Habekotté & H. van Keulen

Plant Research International, P.O. Box 16, 6700 AA Wageningen, The Netherlands
(corresponding author: h.f.m.aarts@plant.wag-ur.nl)

Received at 7 December 1998; accepted in revised form 20 July 1999.

Abstract

In the sandy regions of the Netherlands, high losses of N from intensified dairy farms are threatening environment. Therefore, government defined decreasing maximum levy-free N surpluses for the period 1998-2008. On most dairy farms, the current N surplus has to be reduced by half at least. Farmers fear that realizing these surpluses will be expensive, because it limits application of animal manure, which then has to be exported or additional land has to be bought. Moreover, farmers are worried about the impact on soil fertility. To explore the possibilities for reducing surpluses of average intensive farms by improved nutrient management, farming systems research is carried out at prototype farm 'De Marke'. Results are compared with results of a commercial farm in the mid-eighties, the moment that systems research started and introduction of the milk quota system put a halt to further intensification. Results indicate that average intensive farms can realise a reduction in N surplus to a level below the defined final maximum, without the need to buy land or to export slurry. Inputs of N in purchased feeds and fertilisers decreased by 56 and 78%, respectively. Important factors are reduced feed intake per unit milk, as a result of a higher milk yield per cow, less young stock and judicious feeding, an improved utilization of 'home-made' manure and a considered balance between the grassland and maize area. Changed soil fertility status did not constrain crop production. Nitrate concentration in the upper groundwater decreased from 200 to 50 mg l^{-1}, within a few years.

Keywords:

nitrogen, N, nitrate, ammonia, dairy farming, systems research, environment, sandy soils, groundwater, leaching

Introduction

Dairy farming is the major sector of Dutch agriculture, occupying 64% of its 2 million hectares farmland (Van der Molen *et al.*, 1998). In the sixties and seventies, farms strongly intensified milk production by increasing inputs of fertilisers and feeds. Although introduction of the quota system in 1984 reduced national milk production by 15%, dairy farming is still intensive, especially in the sandy regions (630,000 ha), with an average milk production of 12,400 kg $ha^{-1}yr^{-1}$, 500 kg above the national average (Beldman & Prins, 1999).
Intensification has led to a serious imbalance between farm inputs of nitrogen (N) in purchased fertilisers and feeds and as atmospheric deposition, and farm outputs in milk and meat. In the mid-eighties outputs represented on average only 14% of the inputs (Aarts *et al.*, 1992). The surplus of 470 kg N $ha^{-1}yr^{-1}$ contributed to environmental pollution by emission of ammonia and nitrous oxide (N_2O) to the air and nitrate to the groundwater. About 50% of the national emissions of ammonia and 37% of those of nitrous oxide originated from dairy farming (Lekkerkerk *et al.*, 1995; Velthof & Oenema, 1997). Nitrate concentrations in the shallow groundwater of sandy regions exceeded the standard (50 mg l^{-1}) of the 1980 EU Drinking Water Quality Directive by a factor of up to five (Fraters *et al.*, 1998).
From 1987 onwards, the Dutch government has taken measures to reduce environmental impact of dairy farming, first by eliminating excessive use of animal manure. Nevertheless, surpluses remained high (De Walle & Sevenster, 1998). Subsequently, decreasing maximum permitted surpluses were defined for the period 1998-2008, with final values of 140-180 kg N $ha^{-1}yr^{-1}$ for grassland and 60-100 for arable land (Table 1). Surpluses are calculated as the difference between N in purchased feeds, fertilisers and cattle, and in sold agricultural products and manure. Deposition and biological fixation are not taken into account in this 'farm gate balance' approach of the MINeral Accounting System (MINAS). Surpluses above the defined levels are levied (Van den Brand & Smit, 1998).

Table 1. Maximum levy-free N surpluses in the Netherlands (kg ha^{-1} yr^{-1}, inputs by atmospheric deposition and clover not included; in brackets values for soils very sensitive to nitrate leaching; Source: Van den Brand & Smit, 1998).

	1998	2000	2002	2005	2008
Grassland	300	275	250	200	180 (140)
Arable land	175	150	125	110	100 (60)

On most dairy farms, the current N surplus has to be reduced by half at least, to attain the standard for the year 2008. Farmers fear that this may lead to high costs, because it limits application of animal manure and surplus of it has to be exported or applied on additional land. Moreover, farmers are worried about the impact on soil fertility and crop growth, because of reduced fertilisation levels.

The goal of farming systems research is to develop guidelines for farmers to improve management, taking into account farm objectives and farm conditions. In addition, the government needs information on the practical feasibility of measures, aiming at reducing pollution. This paper describes the results of systems research, aiming at reducing surpluses of average intensive farms by improved nutrient management, leading to strongly reduced inputs of N in purchased feeds and fertilisers.

Research approach

Characteristic for dairy farming systems is the combination of plant and animal production. By exchanging manure and forage between the plant and animal components, nutrients cycle through the system, leading to losses to air and water. Single nutrient flows can be influenced by management, but intervening in one may affect flows elsewhere in the cycle. Therefore, whole farm research is needed to find attractive options to reduce losses (Jarvis *et al.*, 1996). However, that presents two methodological problems. Firstly, an 'experiment' cannot be replicated, because of specific farm conditions. Secondly, these

specific conditions limit the possibilities for extrapolation of results to other farms.

An attractive solution to these problems is to combine system modelling and system prototyping. Modelling is used to combine knowledge and to generate systems that, in theory, can realise farm objectives. Implementation in practice (prototyping) of one of these theoretical systems provides the opportunity to test the formulated hypotheses and validate the model results on which system design was based. Improved models can be used as tools by advisory services to assist in adapting commercial farms to changes in environmental and production constraints.

System modelling

Modelling started in 1987 by analysing system characteristics, nutrient flows and management of commercial dairy farms, to gain insight in the functioning of the dairy farming system, identify options for improvements and create a reference point for improved farming systems. Simple, transparent models have been applied to quantify and integrate the main components of the farming system. They included calculation of the effects of fertiliser and moisture supply on crop growth and related nutrient flows, and the effects of diet composition on milk production and excretion of nutrients in urine and faeces (Aarts *et al.*, 1992).

The set of models was used to design a number of farming systems, suitable for average intensive dairy farms in sandy regions, in theory realising strict environmental goals (Table 2). These environmental goals are more ambitious than those set for commercial farms by government regulations. The main reasons are that the latter do not always guarantee attainment of the desired environmental quality, and problems associated with realising environmental goals will come to the fore earlier and more pronounced. The upper limit for nitrate content of groundwater was set to 50 mg l^{-1}, according to the 1980 EU Drinking Water Quality Directive. On the basis of the average annual precipitation surplus of 300 mm, losses to the groundwater should not exceed 34 kg N $ha^{-1}yr^{-1}$. Ammonia emissions from urine and faeces should be limited to 30 kg N $ha^{-1}yr^{-1}$, 70 % below the average level in the mid-eighties. Emission of nitrous oxide is limited to 3 kg N $ha^{-1}yr^{-1}$, a reduction of 66%. Assuming no N-accumulation in the soil, losses of 14 kg N $ha^{-1}yr^{-1}$ from crops and silage and estimated losses by denitrification of 47 kg N $ha^{-1}yr^{-1}$, the surplus should not exceed 128 kg N $ha^{-1}yr^{-1}$ (Aarts *et al.*, 1992; Biewinga *et al.*, 1992).

Table 2. Environmental targets for N in systems research.

Target	Maximum value
Ammonia volatilisation	30 kg N $ha^{-1}yr^{-1}$ from manure
Nitrate leaching	50 mg nitrate l^{-1} in upper ground water
Losses of nitrous oxide	3 kg N $ha^{-1}yr^{-1}$
N surplus	128 kg N $ha^{-1}yr^{-1}$ as farm inputs (including deposition and fixation by clover) minus outputs, assuming no accumulation in soil organic matter

System prototyping

Site description

One of the theoretical systems has been implemented on experimental farm 'De Marke', located in the East of the Netherlands on light sandy soil. Close to the farm, the drinking water company 'Oost Gelderland' is extracting 5 million m^3 groundwater annually for human consumption. In 1989 the land was acquired and it has been used since as intended. However, until 1992 no cattle were present and no organic fertilisers were used. The 55 hectare of land was reclaimed from heather at the beginning of the 20th century. An upper layer of 25 to 30 cm, with an organic matter content of on average 4.8%, overlies a layer of humusfree sand. Groundwater table depth is 1 to 3 m below soil surface, to deep for substantial capillary rise into the root zone. As a result, soil water-supplying capacity to the crop is only 50 mm on most of the land. This drought-sensitive sandy soil location was deliberately selected, as environmental problems tend to be most pronounced here and appropriate N management most difficult. Implementation of the prototype system was completed in 1992.

Layout of the prototype system

In Table 3 the main characteristics of the prototype system 'De Marke' are compared to those of the 'average' commercial farm on sandy soils in the mid-eighties. The proportion of the farm area used as grassland is much lower, and that as maize land consequently higher. The main reason is the demand for feed with a low protein content, to compensate for the rather high contents in

the grass products in the ration. Moreover, the water and fertiliser requirements of grass, per unit harvestable dry matter, strongly exceed those of maize. Even so, the area of grassland at 'De Marke' still exceeds that of maize, because of its possibilities for grazing and the opportunity to apply more manure per unit area (because of a higher uptake of nutrients).

The farm area is divided in permanent grassland and two crop rotations. In crop rotation I, a three-year grassland period is followed by three years arable cropping, in crop rotation II by five. Until 1995, fodder beets were grown in the first year after a grass period, followed by maize. Since then, maize is the only arable crop, because it appeared more attractive in feeding and the risk of excess nitrate leaching in the first arable year (increased mineralisation from decaying grass sod) could be avoided by omitting fertilisation. Italian ryegrass is sown between the maize rows, acting as a catch crop by taking up surplus soil nitrate during ripening and after harvest of the maize. On most commercial farms, fields are used continuously either for growing maize or grass and a catch crop is not common. The permanent grassland and the area of crop rotation I, comprising about 70% of the total farm area and situated rather close to the farm buildings, can be irrigated if urgently needed. On average, 100 mm yr^{-1} has to be applied on grassland, on maize 25 mm.

N fertilisation levels at 'De Marke' do not exceed 250 kg ha^{-1} for grassland and 100 kg for maize, including N from slurry, clover and the anticipated contribution of Italian ryegrass and grass sod after ploughing, about 40% below the levels on commercial farms. Mineral N fertilisers are only applied on grassland, on average 124 kg ha^{-1} annually. About 75 % of the slurry produced by the cattle is applied on grassland, on permanent grassland on average 49 m^3 $ha^{-1}yr^{-1}$ (90 kg plant available N and 24 kg P), on rotational grassland 72 (133 kg N and 37 kg P). Maize receives on average 26 m^3 (58 kg N and 12 kg P). No fertilisers are applied between 15th August and 1st March, because of the risk of nitrate leaching due to the precipitation surplus and low crop demand.

The farm milk quota is 11,890 kg $ha^{-1}yr^{-1}$, somewhat lower than the average in sandy regions, but close to the national average. Milk yield is 8,200 kg $cow^{-1}yr^{-1}$, considerably higher than on commercial farms in the mid-eighties (5,500 kg). Young stock is only kept for replacement, which reduces feed requirements per kg milk. Composition of the feed rations aims at maximising the conversion of N in the feed into milk and body weight. In summer, the dairy cattle are allowed limited grazing time for two periods of 4 hours daily, with an intermediate resting time indoors ('siesta grazing'). During this period and during the night,

Results

Nitrogen flows

The main annual N flows in system 'De Marke', for the period 1993-1996, are presented in Table 4 and Figure 1. For comparison, the flows are given of the 'average' commercial farm in the mid-eighties, the moment that introduction of the milk quota system put a halt to further intensification and systems research started. First, the flows for the farm as a whole are discussed, and subsequently for the components 'cattle' and 'soil/crops'.

Farm level

It was anticipated (Table 4) that the surplus would decrease from 487 kg N $ha^{-1}yr^{-1}$ (commercial farm) to 122 kg (model calculated). Average realised surplus was 166 kg (80 kg when calculated according to MINAS). Input of N in purchased feed is 56% below that of the commercial farm, but substantially higher than anticipated, mainly because of higher intake per animal, and more young stock. The contribution of clover to the N supply of grassland was less than expected, mainly as a result of frost damage. Input of mineral fertiliser was a little more than expected, but still 78% below that on the commercial farm. Total N input is 58% below that on the commercial farm, while output is only 9% less, because of a slightly lower milk production per hectare and a smaller number of animals sold. N utilisation, defined as output divided by input, of farming system 'De Marke' (31%), was considerably higher than on the commercial farm (14%), but below model estimations (36%).

Cattle component

N intake by cattle in feed was 16% more and N yields of the crops 6% less than model calculated. Therefore, the fraction of purchased N in total N intake was 25% instead of 15. N in feed is utilised more efficiently than on the commercial farm: 23% is recovered in milk and meat, compared to 16% on the commercial farm. Minimum N requirements of lactating cows were exceeded by 3% (summer) and 8% (winter), of non-lactating cows by 39% (summer and winter) and of young stock by 180 (summer) and 36% (winter). The main reasons are

Table 4. N-budgets as model-calculated (prognoses) and realised for 'De Marke' and for the average commercial farm in the mid-eighties (kg ha⁻¹ yr⁻¹).

	'De Marke'					Commercial farm
	Prognoses	93/94	94/95	95/96	Average	1983/1986
Cattle component						
Inputs:						
- Purchased feed	41	74	84	83	80	182
- Home-grown feed	237	226	246	220	243	314
Total	278	336	330	303	323	496
Outputs:						
- Milk	62	65	64	62	64	68
- Meat	8	10	9	10	10	13
- Excreta during grazing	55	52	62	46	53	191
- Excreta indoors	151	209	194	188	197	224
Total	276	336	329	306	324	496
Milk and meat as % of input	25	22	22	24	23	16
Soil/crop component						
Inputs:						
- Urine and dung patches*	51	48	57	43	49	164
- Slurry*	137	181	227	166	191	146
- Mineral fertiliser	67	52	96	75	74	330
- Atmospheric deposition	49	49	49	49	49	49
- Recycled forage losses	21	18	20	18	19	60
- Fixation by clover	30	12	5	8	8	0
Total	359	360	454	359	390	749
Output:						
- Harvestable crop	276	275	270	232	259	398
Harvestable crop as % of input	77	76	59	65	66	53
Whole farm						
Inputs:						
- Mineral fertiliser	67	52	96	75	74	330
- Purchased feed	41	74	84	83	80	182
- Atmospheric deposition	49	49	49	49	49	49
- Fixation by clover	30	12	5	8	8	0
- Miscellaneous**	5	28	37	22	29	7
Total	192	215	271	237	240	568
Outputs:						
- Milk	62	65	64	62	64	68
- Meat	8	10	9	10	10	13
Total	70	75	73	72	74	81
Input – output	122	140	198	165	166	487
Output as % of input	36	35	27	30	31	14

* *after volatilisation of ammonia*

** *mainly as decrease in stocks of feed and slurry*

a: 'De Marke'

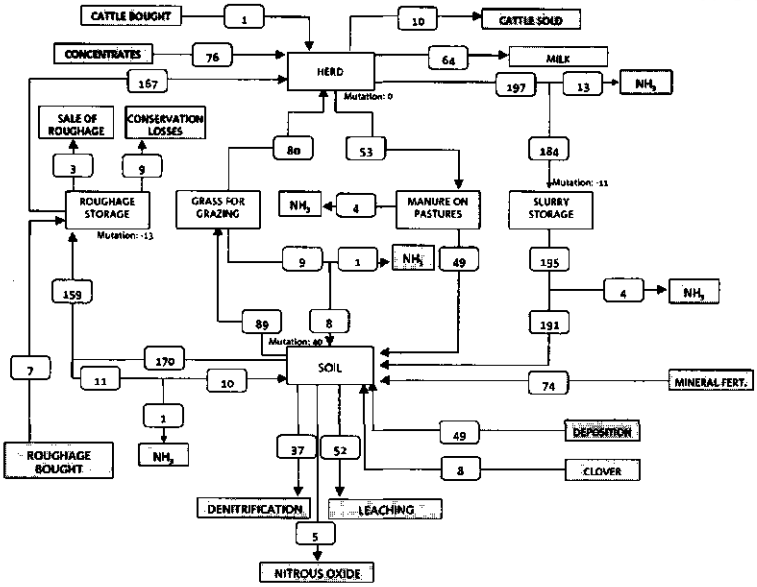

b: Commercial farm

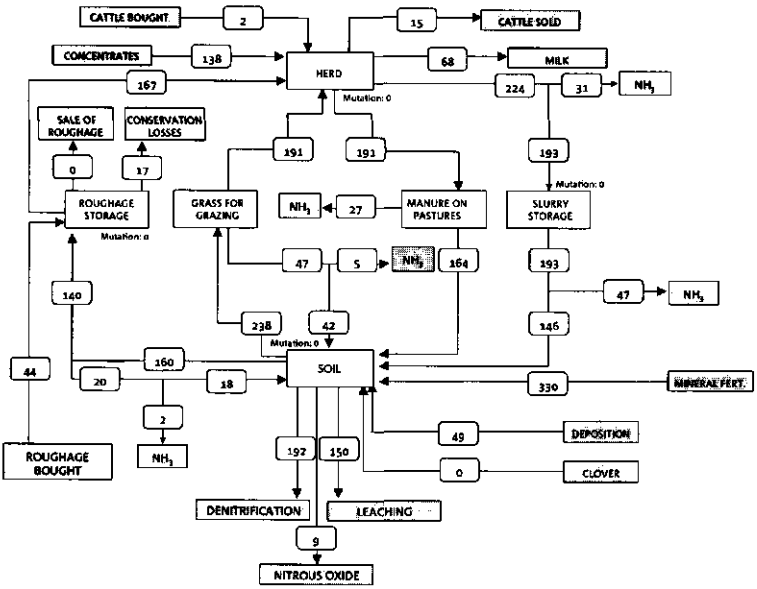

Figure 1. N-cycle of a: 'De Marke' (average 1993-1996) and b: a commercial farm on sandy soil in the mid eighties (kg ha^{-1})

the very low N requirements of non-lactating cows and young stock, continuous grazing of young stock and the limited possibilities for individual feeding of animals, living in a herd.
The quantity of N in faeces and urine, produced in excess of what was expected on the basis of model calculations, ended up in slurry. Production on pasture was as model calculated. By restricting grazing time, excretion of N on pasture was on average 21% of total excretion, compared to 46% for the commercial farm.

Soil/crop component

Total soil input was somewhat higher than predicted at 52% of the commercial farm. Almost 49% originated from slurry, more than anticipated because of the higher excretion indoors, compared to 19% at the commercial farm. N in harvestable parts of crops was somewhat lower than predicted, mainly because of low crop yields in the dry growing season 1995. N-contents of fresh grass (36 g per kg dry matter), grass silage (29 g) and maize silage (12 g) were 9-11% below those on commercial farms (Habekotté *et al.*, 1998). Therefore, and because a higher proportion of land was used to grow maize, average N-yield per ha was considerably lower. On average, 131 kg N $ha^{-1}yr^{-1}$ was not recovered in harvestable products, compared to 351 kg at the commercial farm. This surplus must have accumulated in the soil as organic N, leached as nitrate, or volatilised as N_2 or N_2O. N utilisation of the soil/crop component of the system was 66%, compared to 53% for the commercial farm.

Soil fertility and crop production

Results of soil analyses suggest an average increase in organic N (N-total) with 1 mg per 100 g dry soil annually, corresponding with about 40 kg N $ha^{-1}yr^{-1}$ (Table 5). Differences in net mineralisation of up to 90 kg N $ha^{-1}yr^{-1}$ were found among years (Aarts, 1996). In general, mineralisation was positively correlated with rainfall during the growing season. Soil organic matter content appeared rather constant. Plant available P (data not presented) decreased until 1995 by 15-26%, but then stabilised at levels not limiting crop growth (Aarts *et al.*, 2000).
Results of field trials on 'De Marke' showed that yields of maize and grass were 8-10 % below those of crops fertilised in accordance with recommendations for

Table 5. Soil fertility (0–30 cm; organic matter in g per 100 g dry soil, N-total in mg per 100 g dry soil; mean ± standard deviation).

	1989	1994	1995	1996	1997
Organic matter	4.8 ± 0.8	4.9 ± 0.8	4.8 ± 0.8	4.6 ± 0.7	4.7 ± 0.7
N-total	142 ± 19	144 ± 21	138 ± 19	149 ± 19	157 ± 21

commercial farms, due to N deficiency. Nevertheless, availability of water is considered the major yield-determining factor (Habekotté *et al.*, 1998). In the period 1993-1998 annual average crop yields varied between 8,000 and 10,100 kg dry matter ha^{-1} for grass (with 9,200 kg as average) and between 9,000 and 12,000 kg for maize (with 10,600 kg as average).

Nitrate leaching

As shown in Table 6, average nitrate content in the upper groundwater of the farm strongly decreased over time and was significantly below 50 mg l^{-1} in 1996. Results (unpublished) of measurements of the drinking water company 'Oost Gelderland', on plots close to 'De Marke', cultivated under current production techniques, showed concentrations almost four times as high. In 1997, nitrate content on 'De Marke' increased, presumably as a result of extremely heavy rainfall in early summer, leading to leaching from recently applied fertilisers.
The differences in nitrate concentrations below permanent grassland, crop rotation I and rotation II could be due to the intensity of grazing (Hack-ten Broeke & De Groot, 1998). The grassland of rotation II is only grazed by young stock and most of the grass is harvested as silage. Permanent grassland and grassland in crop rotation I are rather intensively grazed by lactating cows. These differences are also reflected in data presented in Table 7. Nitrate concentrations below the less intensively grazed grassland of crop rotation II are lowest. Concentrations below maize of both crop rotations are almost equal.
In the period 1993-1996, exceptionally high rainfall in winter caused a precipitation surplus of on average 490 mm yr^{-1}, about 190 mm above the long-term average. Based on this surplus and an average nitrate content of 47 mg l^{-1}, annual losses to the groundwater would have been 52 kg N ha^{-1}.

Table 6. Time course of nitrate concentration (mg l^{-1}) in the upper groundwater; mean ± standard deviation.

	1990	1992	1993	1994	1995	1996	1997
Perm. grassland	159 ± 82	80 ± 33	50 ± 16	43 ± 14	60 ± 17	52 ± 24	96 ± 57
Rotation I	220 ±160	117 ± 50	43 ± 45	46 ± 29	54 ± 44	36 ± 17	49 ± 23
Rotation II	181 ±180	104 ± 59	53 ± 23	35 ± 17	35 ± 27	20 ± 16	47 ± 41
Farm	*199 ±149*	*107 ± 49*	*47 ± 36*	*43 ± 24*	*51 ± 36*	*35 ± 20*	*57 ± 38*

Table 7. Nitrate concentration (mg l^{-1}) in the upper groundwater below grass and maize (1995-1997); mean ± standard deviation.

	Grass	Maize
Permanent grassland	71 ± 39	–
Crop rotation I	49 ± 36	39 ± 24
Crop rotation II	36 ± 45	42 ± 28
Average	*55 ± 39*	*40 ± 25*

Ammonia and nitrous oxide emissions

Ammonia volatilisation from manure, as presented in Figure 1, was calculated by multiplying the relevant N-flows by emission factors, derived from standard values, taking into account specific conditions at 'De Marke' (Biewinga *et al.*, 1992). It was assumed that volatilisation from the stable was 7% of the N excreted. Measurements indicated emissions of only 5%, i.e. volatilisation may have been overestimated by 3 kg N $ha^{-1}yr^{-1}$. Losses during grazing were assumed to be 7% of the excreted N. Occasional measurements showed losses of about 9%, and consequently an additional volatilisation of 1 kg. Application of slurry on grassland supposedly is associated with volatilisation losses of 1.5%. As losses up to 4% were measured, due to insufficiently deep injection, volatilisation was 2 kg N higher. On arable land, slurry is injected deeply

Oenema, O. & C.W.J. Roest, 1998.

Nitrogen and phosphorus losses from agriculture into surface waters; the effects of policies and measures in the Netherlands. Wat Sci Tech *37: 19-30*

Van den Brandt, H.P. & H.P. Smit, 1998.

Mineral accounting: the way to combat eutrophication and to achieve the drinking water objective. Env Poll *102: 705-709*

Van der Molen, D.T., A. Breeuwsma & P.C.M. Boers, 1998.

Agricultural nutrient losses to surface water in the Netherlands: impact, strategies and perspectives. J Environ Qual *27: 4-11*

Velthof, G.L. & O. Oenema O, 1997.

Nitrous oxide emission from dairy farming systems in the Netherlands. Neth J Agric Sci *45: 347-360*

Veenarbeiders, die dit boek leest, legt U op den landbouw toe, want volgens verklaring van een wethouder van Deurne - (die het weten kan omdat de gemeente Deurne zelf er een eigen veenexploitatie op na houdt) - kan de allerbeste peelwerker niet meer dan 300 Gl. 's jaars verdienen.

Pastoor H.W. Roes, 1908. Bemesting op zandgrond. Boerenbond Deurne

Managing dairy farming systems for groundwater conservation in the sandy regions of the Netherlands

Report 101 AB-DLO (1999)
Journal of Environmental Quality (condensed, adapted version; in press)

Managing dairy farming systems for groundwater conservation in the sandy regions of the Netherlands

H.F.M. Aarts*, C. Grashoff & H. van Keulen

Research Institute for Agrobiology and Soil Fertility (AB-DLO), P.O. Box 14 6700 AA Wageningen, The Netherlands. * Corresponding author h.f.m.aarts@ab.dlo.nl

Abstract

In the Netherlands, the demand for clean groundwater for industrial and domestic purposes is still increasing. Moreover, groundwater level has to increase to preserve natural habitats. Possibilities to increase 'production' of extractable groundwater of high quality, by growing crops with lower water requirements and reducing irrigation, fertilisation, grazing and drainage are examined. This paper focuses on the benefits of these measures for water conservation and on the possibilities of their incorporation in dairy farming systems. On an experimental farm, 'De Marke', annual groundwater production could be increased by 550 m^3 per ha, while nitrate concentration decreased from 200 mg per liter to 50. Milk production of 12,000 kg per ha was comparable with that of commercial farms. Additional costs appeared lower than the costs for purification of surface water. Therefore, it is concluded that integrating groundwater management in dairy farming is technically and economically feasible and therefore attractive for farmers, water companies and nature organisations. It may be feasible to estimate water production of individual farms on the basis of crop areas, use of fertiliser and irrigation water. Temporary storage of precipitation surplus, through reduced drainage, requires collaboration of farmers, regional authorities and water companies.

Keywords:

farm management, irrigation, grassland, maize, water use, environment, nitrogen

Introduction

Sandy soils in the East and South of the Netherlands are mainly used for forage production for dairy cattle, with 520,000 ha perennial ryegrass (*Lolium perenne* L.) and 180,000 ha silage maize (*Zea mays* L.) as main crops, representing 61% and 21% of the cultivated area, respectively. Besides, most of Dutch drinking water is processed from groundwater from these areas and drought sensitive nature reserves are located there. The intensive farming systems in these regions require high and stable feed supplies, hence they are aiming at maximising crop yields by high fertilisation levels and ample water supply. Over the last decades, natural water supplying capacity of the cultivated sandy soils has strongly declined. The traditional arable fields, with a high water holding capacity in the humic upper layer, created by generations of farmers, were partly acquired for urban development and in the rather recently cultivated areas, groundwater table depths increased considerably, mainly due to improved drainage and extraction of groundwater, to levels in general between 1 and 3 m below the surface (Van der Molen *et al.*, 1998). Consequently, capillary transport of groundwater to the rooted profile is negligible on most fields.

Farmers on these drought-sensitive soils now use sprinkler irrigation in periods of rainfall deficiency. However, irrigation possibilities will shortly be restricted to save groundwater for human consumption and to reduce water table depths for nature conservation and restoration. Moreover, groundwater quality has to be improved. Nitrate content has to be reduced to values not exceeding 50 mg/l, the standard of the 1980 EC Directive on Quality of Water for Human Consumption, a reduction of about 75% (Fraters *et al.*, 1998; Oenema *et al.*, 1998).

As the quantity of extractable groundwater is limited, additional water from the rivers Rhine and Meuse is purified for industrial and domestic purposes, at high costs. However, there is a consumer preference for drinking groundwater instead of water from rivers. As a consequence, a discussion has started about possibilities to increase 'production' of extractable groundwater of high quality, by growing crops with lower water requirements, reducing irrigation, fertilisation and grazing, and reducing drainage in winter and early spring, causing also higher groundwater tables in summer.

This paper focuses on the benefits of these measures for water conservation and on the possibilities for their incorporation in dairy farming systems on sandy soils. First, water and nitrogen relationships of the soil/crop component of the dairy farm are quantified, using data from three experiments: a) 'Klein Gastel'

provides information on water use efficiency and recovery after drought stress of different forage crops; b) 'Heino' on the effects of sprinkler irrigation and fertilisation on dry matter production and N uptake of grass; and c) 'Steenbergen' on the influence of groundwater table depths on grass growth and efficiency of uptake of applied fertilisers. Subsequently, flows of water on the prototype dairy farming system 'De Marke' - focusing on long-term 'green' objectives of Dutch society and related possibilities and constraints for commercial dairy farming on sandy soil (Aarts *et al.*, 2000a, b) - are quantified. Flows are compared to those at current commercial farms, allowing analysis of potential benefits and practical feasibility of integrating water management in dairy farming.

Water and nitrogen relationships in forage production

Effects of water availability on forage crops: Experiment 'Klein Gastel'

a. Method and materials

Crops vary in water consumption and drought tolerance. Experimental results with individual crop species are abundant, but comparisons of behaviour of different species under equal, temperate conditions are scarce (Ehlers, 1997). Therefore, between 1994 and 1996, water use, growth and recovery after periods of drought stress of a number of forage crops were studied under Dutch climatic conditions (Aarts *et al.*, 1996; Smid *et al.*, 1998).
Perennial ryegrass, maize, lucerne (*Medicago sativa* L.), triticale (*Triticosecale* Wittm.) and fodder beet (*Beta vulgaris* L.) were grown in containers with a surface area of 0.63 m^2. The containers were filled with 10 cm gravel at the bottom, covered by 30 cm sandy soil, with an organic matter content of 3.5%. Hence, the profile resembled a drought-sensitive sandy soil with a water supplying capacity of about 50 mm. Crops were fertilised according to 'good farming practice'. The containers were protected from rainfall by a transparent shelter. Crops were grown: a) at optimal supply of water ('no drought', continuously 20 volume % water in soil, pF 2.0), b) with a period of mild drought stress in early July (generally the driest period in the Netherlands) imposed by withholding water until the plants wilted at daytime but still recovered at night, keeping that water content of the soil constant for 10 days

('mild drought', 8 volume % water, pF 3.0), and c) with a period of severe drought: no watering for 8 days after the moment plants started wilting ('severe drought', finally 4 volume % water, pF 4.2). After the drought periods, water content of the soils was restored to that of the treatment 'no drought'. Water consumption was monitored by weighing the containers twice weekly. Simultaneously, the same crop species and varieties were grown at different N fertilisation levels on sandy soil, near the village of Gastel, to monitor crop performance under field conditions (Van der Schans & Stienezen, 1998).

b. Results and discussion

Crops re-watered after a period of mild drought stress, showed annual yield reductions of less than 10% (Table 1). Grass yields were even increased (+5%) by a short period of drought. Maize yields, however, were reduced on average by 17%. After prolonged drought periods, crop performance strongly varied. Following re-watering, crops capable of forming new leaves (grass, lucerne and beets), rapidly replaced their lost leaves and continued to grow. None of these crops appeared permanently damaged by the drought period, lasting 3 or 4 weeks at most. The magnitude of yield depression is then correlated to the length of the dry period, in which photosynthesis was restricted, and to the dry matter lost during that period (mainly leaves). In the field experiment at Gastel, drought sometimes lasted for more than 6 weeks, leading to death of the grass sward and, hence, the need for reseeding. Sward deterioration was clearly more severe at higher N fertilisation levels.
The relatively large yield reduction in maize, after a period of severe drought, can be explained by sink limitation. Due to unfavourable conditions during

Table 1. Average yield depression due to drought (% difference with dry matter yield 'no drought', 1994-1996).

	Mild drought	Severe drought
Perennial ryegrass	+5	-10
Lucerne	-9	-24
Triticale	-3	-7
Fodder beets	-9	-19
Maize	-17	-37

seed set, seed number is very low and formation of new seeds or leaves is impossible (NeSmith & Ritchie, 1992; Artlip *et al.*, 1995; Ray & Sinclair, 1998). If dry matter accumulation capacity of the grains is completely used, photosynthesis is reduced, due to substrate inhibition (Van Keulen & Seligman, 1987). Moreover, feed quality at harvest is low, because of the low proportion of grains in total dry matter. For maize, therefore, formation of a sufficient sink capacity is critical, which can be realised, for instance, by a single irrigation during or just after flowering.

Total dry matter production of triticale and the proportion of grains in total yield, were only slightly affected by drought, as flowering is rather early in summer, so that the main drought periods are avoided during this critical stage.

Nitrogen yields of all crop species were less affected by drought than dry matter yields. In general, nitrogen is taken up preferentially early in the crop's life cycle, and is subsequently 'diluted' by accumulation of carbohydrates and other nitrogen-free material (Van Keulen, 1977). However, in lucerne, nitrogen yield is more reduced than that of dry matter. Nitrogen acquisition of lucerne largely depends on fixation by symbiotic bacteria, which, apparently, is affected more strongly than photosynthesis.

Stubble and root dry matter was determined at the end of the growing season for some treatments. Dry matter in roots and stubble of first year perennial ryegrass was 39 (no drought) to 45% (severe drought) of the total dry matter (1995), of first year lucerne 53 and 69% (1996) and of maize 5 and 10% (1995), indicating that drought more strongly affected harvestable dry matter yield than formation of roots and stubble (Brouwer, 1963).

Table 2. Average seasonal transpiration coefficients (1994 –1996, kg water/kg harvestable dry matter).

	No drought	Mild drought	Severe drought
Perennial ryegrass	362	357	330
Lucerne	502	483	564
Triticale	251	238	228
Fodder beets	216	224	216
Maize	162	167	170

Water use per unit harvestable dry matter produced (transpiration coefficient; De Wit, 1958), strongly varied among species (Table 2). Lucerne has by far the highest requirement, with, on average 516 kg water per kg dry matter. Values were higher in the first year than in the second year (data not presented), probably due to the formation of an extensive root system in the first year, which is only partially replaced and extended in the second year (Versteeg, 1985). Perennial ryegrass also has a high transpiration coefficient, i.e. 350 on average. The arable crops triticale, fodder beet and maize have much lower transpiration coefficients, 239, 219 and 166, respectively. Comparable results have been reported from Germany by Roth *et al.* (1988), but results obtained under different climatic conditions may differ considerably and are strongly correlated with average vapour pressure deficit of the air during the growing period (Tanner & Sinclair, 1983; Ehlers, 1997). The low values for the arable crops, compared to lucerne and perennial ryegrass, can be explained by the smaller proportion of dry matter invested in non-harvestable stubble and roots. The low transpiration coefficient of maize is, moreover, due to a more water-efficient photosynthetic mechanism (C_4), typical for crops originating from tropical and sub-tropical regions (Van Keulen & Van Laar, 1986). Evaporation from bare soil, kept at field capacity, was only 10–15% of the evapotranspiration of optimally watered crops.

Average seasonal transpiration coefficients of the treatment 'no drought', 'mild drought' and 'severe drought' were almost identical (Table 2), i.e. they were not affected by water availability to the crops. Hence, crops do not use water more efficiently under dry conditions (De Wit, 1958). On sandy soils, transpiration is hardly reduced until almost all available water has been transpired and the crop starts to wilt. Reductions in dry matter production, due to water shortage, are therefore associated with proportional reductions in water consumption, an observation in line with a long research tradition (Briggs & Shantz, 1914; De Wit, 1958; Hanks, 1974; Tanner & Sinclair, 1983; Ray & Sinclair, 1998).

Transpiration coefficients of grass (Table 3) and lucerne strongly increased during periods with high daily maximum temperatures (under Dutch conditions strongly correlated with high vapour pressure deficits). In the other crops this increase was less prominent, possibly because of partial stomatal closure in response to high vapour pressure deficits (Rawson *et al.*, 1977; El-Sharkawy *et al.*, 1984), resulting in lower water losses during such periods. Water use

Table 3. Average maximum daily temperatures (°C) and transpiration coefficients of perennial ryegrass, for different periods in 1994.

	Period						
	1/5-20/5	20/5-6/6	6/6-21/6	21/6-6/7	6/7-28/7	28/7-23/8	23/8-21/9
No drought	297	203	244	392	754	412	231
Mild drought	306	207	238	407	741	400	227
Severe drought	293	208	239	378	650	407	241
Average	299	206	240	392	715	406	233
Average daily maximum temp.	18	17	18	25	27	24	18

efficiency of grass and lucerne, therefore is especially low in hot periods in summer, exactly when supplemental (irrigation) water is needed.
Drought increased the relative amount of dry matter invested in stubble and roots (see also Hamblin *et al.*, 1990; Schapendonk *et al.*, 1997). As a consequence, measured transpiration coefficients could be expected to be higher, because they are based on harvestable dry matter. On the other hand, crop growth and associated water consumption cease during drought periods, generally characterised by high vapour pressure deficits and consequently high transpiration coefficients, so the average seasonal transpiration coefficient should decrease. In reality, the transpiration coefficient is not greatly affected by drought (Table 2). Therefore, the drought-induced reduction in proportion harvestable dry matter on the transpiration coefficient, seems to be compensated by reduced transpiration in periods with high vapour pressure deficits, coinciding with drought.

Effects of irrigation on grassland: Experiment 'Heino'

a. Method and materials

The influence of irrigation regime, with treatments of no, moderate and intensive irrigation on dry matter production and N-uptake by cut perennial ryegrass was studied in the years 1982, 1983 and 1984, at four N-fertilisation levels (0, 220, 440 and 660 kg N/ha) at Experimental Station Heino, situated on

sandy soil in the East (Wouters *et al.*, 1992). Groundwater level was between 2.0 and 2.5 m below surface, hence capillary transport did not reach into the rooted zone. The water supplying capacity of the soil was estimated at 125 mm per season, rather high compared to an average Dutch sandy soil, because of a rather thick upper humic layer (ancient arable field). At the 'moderately irrigated' fields, irrigation started when the soil at a depth of 25 cm reached a moisture content equivalent to pF 2.7 on the fields fertilised with 440 kg N per ha, annually. In the 'intensively irrigated' treatment, irrigation started at pF 2.3. Irrigation rates were adjusted to bring soil water content in the 0 - 25 cm soil layer to field capacity (pF 2.0). Water was applied very accurately in low doses. In all years a period of serious drought occurred in July and August. Total amounts of applied irrigation water for the 'moderate irrigation' treatment were 196, 169 and 84 mm for the years 1982, 1983 and 1984, respectively, and 246, 196 and 213 mm for the object 'intensive irrigation' treatment.

b. Results and discussion

Dry matter yields were clearly raised by irrigation (Table 4), but differences between 'moderate' and 'intensive' were only small. Efficiency of irrigation - additional harvested dry matter per mm irrigation water – increased with fertilisation level (Table 5), as at higher fertilisation levels less of the additionally produced dry matter is invested in roots and stubble (Ennik *et al.*, 1980). At a fertilisation level of 440 kg N/ha, 492 and 682 kg water was needed to produce 1 kg additional harvestable dry matter ('moderate' and 'intensive', respectively), at 220 kg N/ha 26 - 30% more. These values are in agreement with those obtained in other experiments (Van Boheemen, 1984). In all years, irrigation allowed one additional cut in dry periods, and therefore not only resulted in higher annual yields, but also in a more regular grass production. Irrigation did not always lead to higher yields. When irrigation was followed by heavy rainfall, as happened in 1982 after the second cut, anaerobic conditions reduced grass growth and even sward quality. In general, the mild drought stress on non-irrigated fields improved sod quality, especially in the following spring. In some other trials, cuts following an irrigated cut yielded less than non-irrigated plots (Schothorst & Hettinga, 1983). Irrigation may have resulted in lower levels of reserves in roots and stubble, that sometimes are needed to compensate for unfavourable climatic or management conditions (Hamblin *et al.*, 1990).

Table 4. Yields of dry matter and N in experiment 'Heino' (kg/ha).

Irrigated	N-fert.	dry matter			N		
	(kg N/ha)	1982	1983	1984	1982	1983	1984
Not	0	4500	5700	5300	122	133	111
	220	9700	10100	10000	306	305	258
	440	12300	12500	11800	436	437	407
	660	12300	12700	10800	514	528	479
Moderately	0	6100	7700	6300	153	212	146
1982=196 mm	220	11800	13100	12300	354	367	314
1983=169mm	440	14900	16400	14700	512	513	440
1984=84mm	660	15500	17400	13700	626	649	525
Intensively	0	7000	7400	5800	169	197	153
1982=246mm	220	12600	13300	11800	376	358	335
1983=196mm	440	15700	16400	14400	535	504	469
1984=213mm	660	16300	16900	13500	645	636	554

Table 5. Efficiency of irrigation (kg additional dry matter and N per mm irrigation water) in experiment 'Heino'.

Irrigated	N-fert.	dry matter			N		
	(kg N/ha)	1982	1983	1984	1982	1983	1984
Moderately	0	8	12	12	0.2	0.5	0.4
	220	11	18	27	0.2	0.4	0.7
	440	13	23	35	0.4	0.4	0.4
	660	16	28	35	0.6	0.7	0.5
	Average	12	20	27	0.3	0.5	0.5
Intensively	0	10	9	2	0.2	0.3	0.2
	220	12	16	8	0.3	0.3	0.4
	440	14	20	12	0.4	0.3	0.3
	660	16	21	13	0.5	0.6	0.4
	Average	13	17	9	0.4	0.4	0.3

Irrigation resulted in higher uptake of nitrogen, also in non-fertilised fields (43 kg/ha, on average), originating from increased mineralisation of organic N. Recovery of N from fertilisers - calculated as: (Nyield fertilised plot – Nyield unfertilised plot)/fertiliser dose - was improved by irrigation, but decreased at higher fertilisation levels. Hence, irrigation in combination with higher fertilisation levels – needed to express the higher growth potential - can result in larger amounts of residual mineral N. At the end of the growing season, residual mineral N in irrigated plots was located deeper in the profile than in non-irrigated plots. On plots with a thin humic upper layer, typical for drought-sensitive soils, inaccurate irrigation can easily lead to leaching of nitrate below the rooting depth, during the growing season.

Effects of groundwater level on grassland: Experiment 'Steenbergen'

a. Method and materials

Between 1964 and 1974, the influence of groundwater level on dry matter production and N uptake of permánent grassland on sandy soils was studied in the Central and Eastern parts of the Netherlands (Van Steenbergen, 1977; Noij *et al.*, 1997). Fields were classified (Table 6) as 'rather dry' (groundwater level 85 – 131 cm below surface), 'humid' (51 – 99 cm) or 'wet' (30 – 66 cm).
Fertilisation levels varied between 0 and 500 kg N/ha, annually. To maintain a sward quality, comparable to that on commercial farms, cutting only treatments were applied once in three years. In the two other years, plots were fertilised according to treatment, but used alternately for cutting and grazing,

Table 6. Average groundwater level (1964 – 1974; cm below surface) in experiment 'Steenbergen'.

Field classification	Winter 1/11-28/2	Spring 1/3-30/4	Early summer 1/5-30/6	Late summer 1/7-31/8	Autumn 1/9-31/10
Rather dry	93	85	120	126	131
Humid	55	51	85	99	99
Wet	30	38	59	66	62

making it impossible to measure yields accurately. Each field comprised three replicates, and each year one replicate was used for estimating crop yields by cutting. Harvestable dry matter and N yields are presented as averages of all growing seasons, of the wet growing seasons 1965 and 1966 only, and of the dry seasons 1964, 1967, 1970 and 1971 (Table 7).

b. Results and discussion

Dry matter and N yields of the unfertilised plots are fairly high, compared to values currently obtained in field trials. This is mainly due to the fertilising effects of excreta of grazing cattle. In the year yields were measured by cutting, residual effects of excreta, voided in the preceding two years during grazing, could have resulted in higher yields, especially of the 'unfertilised' plots. Due to the high N yields in the non-fertilised plots, recovery of fertilisers is rather low. For our purpose – analysing effects of water and nitrogen supply on yields - that effect is not serious.

Humid plots have the highest average dry matter yields. Moreover, yield is most stable, convenient for a farmer, because relatively wet or dry years do no affect fodder production to such an extent that the diet of cattle has to be changed. On rather dry plots, dry matter yield is strongly determined by rainfall during the growing season. Crop production in dry years may be too low to cover the grazing requirements. Severe damage to the sward, caused by drought, was not reported and is not plausible, because very drought-sensitive soils and extremely dry years were not included. On wet soils in wet years, crop production is negatively affected as a result of poor functioning of the roots, leading to a low uptake of fertilisers. Moreover, in that situation grazing is risky, because the sward can easily be damaged by trampling.

N yields of unfertilised plots are lowest on rather dry fields, especially in relatively dry years, as mineralisation of organic nitrogen is most strongly reduced in dry soils. In wet years, however, mineralisation on dry soils is stimulated and on humid and wet soils obstructed, resulting in the highest N yields on dry soils. Dry matter yields of non-fertilised plots are strongly related to the amount of N originating from mineralisation. The recovery of applied fertilisers is negatively correlated to seasonal rainfall, and is lowest on wet soils.

Table 7. Yields (kg/ha) of harvestable dry matter (Dm) and nitrogen (N) as averages of the years 1964 - 1974, of the wet years 1965 and 1966, and of the dry years 1964, 1967, 1970 and 1971 in experiment 'Steenbergen'.

	N fertilisation (kg/ha)					
	0	100	200	300	400	500
All years						
Rather dry fields						
N yield	161	208	266	331	375	424
Dm yield	7090	8890	10010	11280	11560	12030
Recovery fertiliser		0.47	0.51	0.54	0.53	0.52
Humid fields						
N yield	204	247	309	385	414	477
Dm yield	8330	10020	11280	12700	12630	13390
Recovery fertiliser		0.39	0.48	0.55	0.50	0.52
Wet fields						
N yield	199	239	288	348	374	414
Dm yield	8130	9630	10880	12290	12310	12660
Recovery fertiliser		0.36	0.41	0.46	0.43	0.42
Relatively wet years						
Rather dry fields						
N yield	197	238	296	347	383	431
Dm yield	8350	9820	11150	12180	12480	12730
Recovery fertiliser		0.40	0.46	0.47	0.45	0.45
Humid fields						
N yield	178	213	259	326	336	402
Dm yield	7750	9380	10590	12290	11890	13040
Recovery fertiliser		0.34	0.39	0.46	0.39	0.44
Wet fields						
N yield	166	188	237	269	286	312
Dm yield	6660	8350	10020	10780	10430	11010
Recovery fertiliser		0.21	0.34	0.33	0.31	0.30
Relatively dry years						
Rather dry fields						
N yield	144	190	246	311	358	408
Dm yield	6300	8210	9320	10630	11000	11520
Recovery fertiliser		0.46	0.49	0.54	0.54	0.52
Humid fields						
N yield	218	257	324	395	438	498
Dm yield	8470	9940	11460	12640	12790	13500
Recovery fertiliser		0.36	0.48	0.53	0.52	0.53
Wet fields						
N yield	205	242	290	358	395	443
Dm yield	8250	9620	10810	12550	12580	13060
Recovery fertiliser		0.34	0.39	0.47	0.46	0.46

Management options in dairy farming: Experimental farm 'De Marke'

a. Method and materials

Current dairy farming systems have to be adapted in the near future, especially in sandy regions, to reduce negative impacts on the environment to levels acceptable by society. To identify options for commercial farms in the long term, research started in 1988, by designing farming systems that, theoretically, combine strict environmental goals with a milk production intensity similar to that on commercial farms (on average 12,000 kg/ha). The environmental goals include increased production of high quality groundwater. One of these systems was selected for testing and improvement under practical conditions at the farm scale. This prototype experimental farm, 'De Marke', is located in the East of the Netherlands on light sandy soil, and will continue at least until 2002 (Aarts *et al.*, 1992; 2000a, b). The name of the farm has a symbolic meaning. A 'marke' is an old legal form to manage common land in that region. Now again there is a common interest: exploring the options and constraints for efficient dairy farming in a clean environment and attractive landscape. Prototyping is funded equally by the Ministries of Agriculture and Environment and by Farmers Union. Research is conducted jointly by the Research Institute for Cattle, Sheep and Horse Husbandry (PR), the Centre for Agriculture and Environment (CLM) and AB-DLO. In 1989, most of the land was acquired and used as intended. Cattle were introduced in 1992.

The land comprising the farm was reclaimed from heather at the beginning of this century. An upper layer of 25 to 30 cm with an organic matter content of 4.8% overlies a layer of practically humusless sand. Groundwater level is at most places so deep, that water cannot reach the root zone by capillary transport. The low groundwater level is partly (50 cm) due to groundwater extraction close to the farm of 5 million m^3 annually, by a drinking water company. The water supplying capacity of the rooted zone is less than 50 mm on most of the fields.

The proportion of grassland in the total area of 'De Marke' is smaller than on most commercial farms, and the proportion of maize consequently larger (Table 8). The main reason is the demand for energy-rich feed with a low nitrogen content, to compensate for the rather high nitrogen contents of the grass products in the ration, to reduce N excretion by cattle. Moreover, the water and

fertiliser requirements of grass per unit harvestable dry matter are much higher than for maize. Nevertheless, at 'De Marke', the area of grassland still exceeds that of maize. Important reasons are the required N and P supply, to cover the feed requirements of the cattle, the possibilities for grazing, and the fact that more animal manure can be applied per ha grassland. Grazing of lactating cows is restricted to 8 hours daily and cows are stabled in autumn one month earlier than on commercial farms, to reduce the number of urine patches and the associated nitrate leaching (Deenen & Middelkoop, 1992).

Table 8. The water balance of 'De Marke' and of an 'average' commercial farm (1993-1996).

	'De Marke'	Commercial farm
Crop proportion (%):		
- Grass	55	80
- Maize	36	20
- Fodder beets	9	0
Harvestable yield (kg dm/ha):		
- Grass	9800	10780
- Maize	10800	11880
- Fodder beets	14400	15840
Water consumption grassland (mm):		
- Crop production	343	377
- Outside growing season	75	75
- Total	418	452
Water consumption maize land (mm):		
- Crop production	178	196
- Outside growing season	109	74
- Total	287	270
Water consumption fodder beet land (mm):		
- Crop production	320	
- Outside growing season	50	
Total	370	
Average water consumption farm (mm)	367	416
Rainfall	844	844
Groundwater production (mm)	477	428

The farm area is divided into permanent grassland (near the stable, convenient because cows are milked indoors) and two crop rotations. In crop rotation I, located rather close to the stable ('house plot'), a three-year grassland period is followed by three years arable cropping. In rotation II, located at a greater distance ('field plot'), arable period is five years. Until 1995, fodder beet was grown the first year after a grass period, followed by maize. Since then, maize has been the only arable crop, because it appeared more attractive in feeding and excess nitrate leaching, following breaking up the grass sward, could also be prevented by an adapted maize production system. That implies that in the first year maize is not fertilised and in all years Italian ryegrass is sown between the rows in June, taking up excess fertiliser and nitrogen mineralised from the end of summer onwards, and creating possibilities for grazing the maize stubble in autumn. At the end of February the Italian ryegrass sward is broken up mechanically to reduce evapotranspiration. On most commercial farms, fields are used continuously either for growing maize or grass, and growing a catch crop after maize harvest is not common. Nitrogen fertilisation levels at 'De Marke' do not exceed 250 kg/ha for grassland and 100 kg for maize, including N from slurry, clover and green manure, about 40% below the levels on commercial farms. No fertilisers are applied between 15th August and 1st March, to reduce the risk of nitrate leaching in the period with limited crop growth and precipitation surplus. Yields of arable crops are estimated per field; grass yields by estimating silage yields and fresh grass yields just before and after grazing. Quality of the upper groundwater was assessed annually, just after the growing season, by the National Institute of Public Health and the Environment (RIVM).

The permanent grassland and the grassland and arable crops of rotation I, combined about 70% of the total farm area, are irrigated by sprinkling if needed to prevent death of the crop, with the consequence of high costs for reseeding and increased risks for nitrate leaching by increased mineralisation (Whitehead, 1990). Additionally, sprinkling is permitted to guarantee grass supply for restricted grazing. Crop rotation II is never irrigated.

b. Results and discussion

Irrigation water requirements vary substantially among crops and years (Table 9). Differences among years evidently are associated with differences in

Table 9. Irrigation on permanent grassland and crop rotation I at 'De Marke' (m^3 per ha per year).

	1993	1994	1995	1996	average
Grass	207	915	1238	1565	962
Maize	0	246	605	57	205
Fodder beets	0	0	419	–[1]	124
Average	133	708	1043	970	706

[1] *in 1996 no fodder beets were grown*

rainfall during the growing season. In all years, even in the wet year 1993, grass had to be irrigated, mostly four times a year, with on average 96 mm water (960 m^3/ha), maize with 20 mm and fodder beets with 12 mm only. On average, 70 mm irrigation was needed on the farm area that could be irrigated, equivalent to 50 mm, when including the non-irrigated rotation II. On average, 91% of the irrigation water was used on grassland, 8% on maize and only 1% on fodder beet.

Because crop yields at the farm were estimated, water consumption can be roughly estimated by multiplying these yields by the transpiration coefficients, derived from experiment 'Klein Gastel' and its related field trials. For maize, 175 kg water per kg harvestable dry matter is assumed, according to results of the field trials (Van der Schans & Stienezen, 1998), slightly higher than measured in 'Klein Gastel', because of the higher stubble in the field trials. The transpiration coefficient of grass is set to 350 and of beets to 220 (leaves included), values derived from the field trials and experiment 'Klein Gastel'.

Outside the growing season of the crop, water is also lost from soil surface and/or vegetation, the quantity depending on the length of that period. Fields covered with vegetation loose more water through evapotranspiration than bare soils. To calculate water loss outside the growing season, it is assumed that on fields covered by vegetation, evapotranspiration is equal to the Makkink reference evaporation (short well-watered grass crop), and on bare soils 50% (Van Kraalingen & Stol, 1997). From directly after the maize harvest in the beginning of October until March, the soil is covered by Italian ryegrass. For grassland, the period outside the growing season is supposed to last from

November 1st till 1st of April. Fodder beet is supposed to be harvested at the end of November and the soil is bare until mid-April. The resultant associated water loss from maize land, grassland and fodder beet land outside the growing season would be 109, 75 and 50 mm of water, respectively. Experiments at 'De Marke' with different levels of fertilisation suggest a 10% higher crop yield in commercial farming systems. In those systems, no Italian ryegrass is grown, resulting in 35 mm lower evapotranspiration outside the growing season of maize land. Transpiration coefficients of crops at 'De Marke' and on commercial farms are supposedly equal, despite the lower fertilisation level of 'De Marke', that might lead to a higher transpiration coefficient of grassland as a result of a higher investment of dry matter in not harvestable stubble and roots (Ennik *et al.*, 1980). However, it is assumed that this is compensated by more irrigation in summer on commercial farms, increasing average transpiration coefficients. Effects of fertilisation level on arable crops, like maize, are not to be expected, because the partitioning between harvestable and not harvestable parts is only slightly affected (De Wit, 1958; Tisdale *et al.*, 1985; Walker & Richard, 1985; Bürckly, 1993).

Water consumption of grassland is 34 mm lower on 'De Marke' (Table 8), but of maize land 17 mm higher, because of the presence of Italian ryegrass. However, water consumption of maize land is substantially below that of grassland. Mainly because of the smaller proportion of grassland at 'De Marke', compared to commercial farms, average water consumption per ha appears to be 49 mm lower in the situation that fodder beets were grown. In 1996, fodder beets were replaced by maize and, as a consequence, the difference between water consumption of an 'average' dairy farm and 'De Marke' increased to 57 mm. Moreover, the quality of the groundwater at 'De Marke' is acceptable, as shown in Table 10. After establishment of 'De Marke', average nitrate concentrations in the upper groundwater rapidly decreased from 200 mg/l to the threshold level of 50 mg/l. Levels below permanent grassland are relatively high, probably due to their relatively intensive grazing regime, because they are located close to the stable. Additional costs of the experimental system for increasing groundwater quantity and improving quality, compared to current commercial farming, are estimated at about 1.5 EURO/100 kg milk, 180 EURO/ha and 5,400 EURO for a farm of average size.

Table 10. Nitrate concentration in the upper groundwater of experimental farm 'De Marke' (mg/l).

	1990	1992	1993	1994	1995	1996	1997
Permanent grassland	159	80	50	43	60	52	96
Rotation I	220	117	43	46	54	36	49
Rotation II	181	104	53	35	35	20	47
Average of the farm	199	107	47	43	51	35	57

Discussion

Crop selection

The experiment 'Klein Gastel' has shown that forage crops under Dutch conditions differ considerably in water consumption per unit harvestable dry matter. These differences are to a large extent associated with differences in the fraction of total dry matter production invested in non-harvestable stubble and roots. Therefore, from the point of view of water economy, it seems attractive to replace (perennial) grass by (annual) forage crops like fodder beets, triticale or maize. However, other considerations set a limit to the degree of replacement. The N and P contents of forage crops are lower, which may interfere with the minimum requirements in feeding cattle. Moreover, more slurry can be applied to grassland, and grass can be harvested by grazing, supposedly beneficial to the health of cattle. Especially on light sandy soils, the larger proportion of non-harvestable parts of grass, compared to forage crops, can play an important role in providing the soil with organic matter, needed to maintain or improve soil fertility characteristics, such as water holding capacity. Fodder beet has the disadvantage that cultivation, storage and feeding are rather laborious and expensive. Maize, with its high energy and low nitrogen content, is an excellent feed in combination with grass, allowing a high milk yield per cow and a low excretion of N, resulting in reduced ammonia volatilisation and nitrate leaching from urine and dung patches. As farmers on sandy soils are familiar with maize cultivation, expanding its area requires no additional management skills or machinery, and involves low costs. On very

drought-sensitive soils, however, availability of water during flowering of maize is critical for yield formation. Therefore, possibilities for some irrigation in dry summers may be essential to realise acceptable levels of yield and quality. If irrigation is completely banned, triticale seems more suitable, because it yields more under those conditions. In the experimental system 'De Marke' it has been shown that about 45% of the farm area can be grown with maize, without creating problems in cattle feeding or soil fertility, far more than the 20% on the 'average' commercial dairy farm.
To reduce leaching, a catch crop following maize, like Italian ryegrass, is necessary, unfortunately leading to increased evapotranspiration after maize harvest. However, at 'De Marke', Italian ryegrass appears valuable from a farm management point of view, because it can be used for feeding young stock and provides additional soil organic matter, allowing replacement of grassland by maize, reducing evapotranspiration at farm scale.

Fertilisation

To attain the desired quality of groundwater, fertilisation of grass and maize has to be reduced by about 40%, compared to current levels on commercial farms, resulting in a reduction in harvestable yields of about 10%. This reduction in yield can be compensated, as shown at 'De Marke', by reducing the feed requirements by more judicious feeding and a higher milk production per cow, reducing the number of animals on the farm. As a result, purchased feed per 100 kg milk and per ha at 'De Marke' is even lower than on commercial farms.
In general, reduced fertiliser levels lead to lower growth rates and hence, to slower water consumption. As a consequence, drought stress is less severe, because the moment of depletion of all available water is delayed, reducing the length of drought periods. High fertilisation levels result in more harvestable dry matter of grassland, partly because of a more favourable partitioning of dry matter (less roots and stubble). As a result, irrigation is more efficient at high fertilisation levels, in terms of additional harvestable dry matter per mm irrigation water. However, reduced investment in stubble and roots can unfavourably affect sward quality and thus require more frequent reseeding. Especially the combination of frequent irrigation and high fertilisation levels is threatening sward quality. Moreover, even at high fertilisation levels, efficiency of irrigation in dry (hot) periods in terms of additional dry matter per unit

irrigation water is very low, with probably 2 kg harvestable dry matter per m^3 water at most, representing a value of about 0.25 EURO.
From the point of view of water management, nitrogen fertilisation of grassland is most profitable in spring. Water is used most efficiently then, as water requirement per kg harvestable dry matter is related to temperature, as shown in experiment 'Klein Gastel'. Therefore, a larger part of the total annual fertiliser dose should be applied in spring and early summer than under current management on commercial farms, leading to relatively high grass yields in spring. Fortunately, grass silage, harvested in that period is in general of higher quality than that harvested later.

Grazing

Grazing has to be restricted, especially in late summer and autumn, to limit leaching from urine patches. Restricted grazing has the additional advantage that more of the excreta are collected in the stable and can be used as fertiliser, saving costs for mineral fertilisers. If cows are stabled relatively early in autumn, fertilisation can be stopped earlier because no fresh grass is needed for grazing in autumn. In general, limiting fertilisation in late summer and autumn will make the sward less susceptible to frost damage, reducing the need for reseeding and the related risk for nitrate leaching.

Irrigation

On dry sandy soils irrigation can be needed to prevent dying of crops, which would lead to high costs for reseeding and high risks for leaching of nitrate (reduced uptake of nutrients and increased mineralisation after reseeding). More research is needed to establish under what combinations of conditions, with respect to drought (intensity and length), fertilisation (time and dose) and grassland utilisation (grazing, cutting), grass swards will be permanently damaged, if not irrigated timely. Field observations suggest that on sandy soil drought susceptibility of the grass sward increases with age. If so, a rotation of grass and maize can be attractive to reduce irrigation needs of grassland. Moreover, frequent irrigation presumably increases drought susceptibility. Both observations could be explained by a shallower rooting depth, induced by compression of the (sub) soil and availability of water and nutrients in upper layers only. However, no research results are available to support these

hypotheses. Maize may need irrigation only during flowering, grass during a much longer period. Therefore, replacing grass by maize, in general, reduces the need for irrigation. The amount of irrigation water should not exceed the storage capacity of the rooted zone. Moreover, because of irregular distribution of irrigation water on commercial farms, high doses may locally cause leaching, and damage to the sward, as observed in experiment 'Heino'. Irrigation can start 'too early', because some drought stress may improve sward quality, resulting in higher production in the long term. However, irrigation may result in one additional cut and more evenly spread grass production in the course of the season, which is attractive from a grazing point of view.

Irrigation, or a relatively wet growing season, stimulates mineralisation on light sandy soils. Moreover, the additional cut under irrigation requires additional fertiliser, with the associated risks of leaching of residual N. Production of grass for grazing during drought periods, based on irrigation, requires large amounts of water per kg dry matter and additional fertiliser. Restricted grazing during drought periods, therefore, will reduce irrigation and fertilisation requirements.

Groundwater table

Results of 'De Marke' show that percolation, i.e. 'production' of groundwater, of a much better quality than on commercial farms, can be increased by about 55 mm or 550 m^3/ha. To allow 'harvest' of this additional surplus, water has to be stored temporarily in the soil, leading to higher water tables, especially in spring and early summer. The amount of 55 mm corresponds to about 18 cm difference in groundwater level. The higher groundwater level will affect crop yields only when it reaches the upper metre of the soil. Groundwater levels between 1 and 0.5 m result in higher crop yields, and the effects of saving on crop water use are then attractive from both an agricultural and environmental point of view, as shown in experiment 'Steenbergen'. Grass production is more stable and fertiliser utilisation efficiency improves. In that situation, however, part of the stored water will be 'lost' by increased transpiration of the crops, associated with increased growth. However, shallower groundwater levels, reaching the rooted zone, result in lower recovery of fertilisers, as a substantial part of the mineral nitrogen may be lost by denitrification, not negatively affecting the quality of groundwater, but contributing to the greenhouse effect through the production of di-nitrogen oxides. Moreover, in that situation,

groundwater quality may be negatively affected by increased concentrations of P (Aarts *et al.*, 2000a), while lower parts of the farm may become so wet, that problems occur for grazing or crop growth. Cultivation of maize may even become impossible.

Economics

In the Netherlands, average annual per capita water consumption is 50 m^3, i.e. the additional groundwater production of 550 m^3/ha, realised at 'De Marke', can replace surface water for 11 individuals. At an average farm size of 30 ha, about 330 persons could profit from improved water management.
Additional costs for purification of surface water, compared to groundwater, are about 0.50 EURO per m^3 (L. Joosten, pers. comm., Netherlands Drinking Water Association), so 8,250 EURO would be saved, not taking into account the higher quality of the groundwater, reducing costs of purification. If current agricultural practices continue, drinking water companies in sandy areas will have to invest in additional purification of groundwater, estimated at 100 million EURO annually (Joosten *et al.*, 1998). The additional costs at dairy farming system 'De Marke', for production of a larger quantity groundwater of excellent quality, are estimated at about 5,400 EURO for a farm of average size.

Conclusion

In theory, integration of groundwater management in dairy farming on sandy soils seems to be feasible and attractive for farmers, drinking water companies and nature organisations and deserves support of Dutch society. It might be feasible to estimate groundwater production and quality of individual farms on the basis of farm data like crop areas, use of fertiliser and irrigation water, data monitored already or soon needed for other purposes (Van der Molen *et al.*, 1998). Additional information may be needed on soil properties. Measures, such as temporary storage of precipitation surplus through reduced drainage, leading to shallower groundwater levels, require collaboration of farmers, regional authorities and water companies, but seem realistic.

und Silomais unter Feldbedingungen und in Gefässversuchen. Arch. Acker- Pflanzenbau Bodenkd. *32:397-403 (in German).*

Schapendonk, A.H.C.M., P. Dijkstra, J. Groenwold, C.S. Pot & S.C. van de Geijn, 1997.
Carbon balance and water use efficiency of frequent cut Lolium perenne L. swards at elevated carbon dioxide. Global Change Biol. *3:207-216.*

Schothorst, C.J.& D. Hettinga, 1983.
Grondverbetering: alternatief voor beregening van grasland op lichte zandgrond? Cultuurtechnisch Tijdschrift *22:213-226. (In Dutch)*

Smid H.G., C. Grashoff & H.F.M. Aarts, 1998.
Vochtverbruik en droogtegevoeligheid van voedergewassen. Experimenteel onderzoek 1994 - 1996. Rep. 91 AB-DLO, Wageningen, The Netherlands. (In Dutch)

Tanner, C.B. & T.R. Sinclair, 1983.
Efficient water use in crop production: research or re-search? In *H.M. Taylor* et al.*(ed.) Limitations of efficient water use in crop production. Am. Soc Agron. Monograph, ASA Monographs Inc, Madison, Wisc:1-27.*

Tisdale, S.L., W.L. Nelson & J.D. Beaton, 1985.
Fertilizers and efficient use of water. In *Soil fertility and fertilizers. Macmillan Publ Comp, New York: 699-719.*

Van Boheemen, P.J.M., 1984.
Additional water use and production of grassland under irrigation. Proc. 10th General Meeting of the European Grassland Federation. Norway:26-30.

Van der Molen, D.T., A. Breeuwsma & P.C.M. Boers, 1998.
Agricultural nutrient losses to surface water in the Netherlands: impact, strategies and perspectives. J. Environ. Qual. *27:4-11*

Van der Schans, D.A. & M.W.J. Stienezen, 1998.
Opbrengstvariabiliteit van voedergewassen op droogtegevoelige grond. In *D.A. van der Schans (ed.) Ruwvoederproductie bij droogte. Themaboekje nr 21 PAV: 21-30. Lelystad, The Netherlands. (In Dutch)*

Van Keulen, H. 1977.
Nitrogen requirements of rice, with special reference to Java. Contr. Centr. Res. Inst. Agric. No. 30. Bogor, Indonesia.

Van Keulen, H. & H.H. van Laar, 1986.
The relation between water use and crop production. In *H. van Keulen & J. Wolf (eds) Modelling of agricultural production: Weather, soils and crops; 117-129. Simulation Monographs, Pudoc. Wageningen, The Netherlands.*

Van Keulen H. & N.G. Seligman, 1987.
Simulation of water use, nitrogen nutrition and growth of a spring wheat crop. Simulation Monographs, Pudoc. Wageningen, The Netherlands.

Van Kraalingen, D.W.G. & W. Stol, 1997.
Evaporation modules for crop growth simulation. Implementation of the algorithms from Penman, Makkink and Priestly-Taylor. Quantitative Approaches in System Analyses 11. AB-DLO, Wageningen, The Netherlands.

Van Steenbergen, T., 1977.
Invloed van grondsoort en jaar op het effect van stikstofbemesting op de grasopbrengst. Stikstof *85:9-16 (In Dutch)*

Versteeg, M.N., 1985.
Factors influencing the productivity of irrigated crops in Southern Peru, in relation to prediction by simulation models. Ph.D. Thesis, Wageningen Agricultural University. Wageningen, The Netherlands.

Walker, G.K. & J.E. Richards, 1985.
Transpiration efficiency in relation to nutrient status. Agron. J. *77:263-269.*

Whitehead, D.C., 1990.
Organic matter and nitrogen in the unharvested fractions of grass swards in relation to the potential for nitrate leaching after ploughing.
Plant Soil *123: 39-49.*

Wouters, A.P., A.H.J. van der Putten & J.H.A.M. Steenvoorden, 1992.
Invloed van beregening op de produktie en stikstofhuishouding van grasland. Gebundelde Verslagen NVWV 33: 60-83. (In Dutch)

Als 't hoofd is niet helder, Gij gaat naar de kelder, met kunstmest.
Gebruikt hem met oordeel! Gij vindt er uw voordeel.

Pastoor H.W. Roes, 1908. Bemesting op zandgrond. Boerenbond Deurne

Efficient resource management in dairy farming on sandy soil

Netherlands Journal of Agricultural Science 47 (1999) 153-167

Efficient resource management in dairy farming on sandy soil

H.F.M. Aarts[1]*, B. Habekotté[1], G.J. Hilhorst[2], G.J. Koskamp[3], F.C. van der Schans[3] & C.K. de Vries[2]

[1] Research Institute for Agrobiology and Soil Fertility (AB-DLO), P.O. Box 14, NL-6700 AA Wageningen, The Netherlands), * Corresponding author (fax: +31-317-423110; e-mail: h.f.m.aarts@ab.dlo.nl)

[2] Research Station for Dairy Farming (PR), Runderweg 6, NL-8219 PK Lelystad, The Netherlands

[3] Centre for Agriculture and Environment (CLM), P.O. Box 10015, NL-3505 AA Utrecht, The Netherlands

Received 31 May 1999; accepted 10 September 1999.

Abstract

Sandy soils in the Netherlands are mainly used for dairy farming. As a result of intensification of dairy farming in the recent past, valued functions of sandy regions now are threatened by high emissions of nitrogen (N) and phosphorus (P) and by increased water consumption by forage crops. Improved utilisation efficiency of resources is proposed as a strategy to realise environmental targets in an economically attractive way. Experimental results of the prototype system 'De Marke' indicate that an average intensive commercial farm can halve inputs of fertilisers and feeds at least, without the need to reduce milk production per hectare or to export slurry. Besides, water consumption can be reduced by 13%, increasing groundwater 'production' by 570 $m^3 ha^{-1}$. Nitrate concentration in the upper groundwater decreased from 200 to 50 mg l^{-1}. Changes in soil fertility did not lead to serious agricultural problems but costs of milk production increased by 5%. However, additional costs probably can be compensated if the extra groundwater is 'harvested' by water companies, because of high cost of purification of surface water and consumer preference for drinking groundwater instead of water from rivers. In 1999, the examined strategy of improved resource management will be implemented on 12 commercial farms, representing the full range of conditions for dairy farming in the Netherlands.

Keywords:

resources, nitrogen, N, nitrate, ammonia, phosphorus, P, dairy farming, systems research, environment, sandy soils, groundwater, leaching

Introduction

The sandy soils in the Netherlands are mainly used for forage production for dairy cattle, with 520,000 ha perennial ryegrass (*Lolium perenne* L.) and 180,000 ha silage maize (*Zea mays* L.) as main crops, representing 82% of the cultivated area. Sandy regions are also important for collecting groundwater, as a source of drinking water for human consumption. Moreover, many valuable nature reserves are located in the sandy areas and recreation has become an important source of income.

From the 1960's onwards, farms strongly intensified milk production by increasing inputs of fertilisers, concentrates and (irrigation) water. In 1984, introduction of the milk quota system in the European Union stopped that process. Current milk production on sandy soils is 12,400 kg ha^{-1} yr^{-1}, 500 kg above the national average and high compared to most other European countries (Beldman & Prins, 1999). As a result of intensification, valued functions of sandy regions are threatened by emissions of nitrogen (N) and phosphorus (P) and lowered groundwater levels. Farm nutrient outputs in milk and meat represent on average only 16 (N) and 27% (P) of inputs, mainly in purchased feeds and fertilisers. The surpluses of about 400 kg N and 40 kg P $ha^{-1}yr^{-1}$ contribute to environmental pollution by emissions of ammonia and nitrous oxide (N_2O) to the air, and nitrate and phosphate to the water.

As a consequence, for instance, nitrate concentrations in the shallow groundwater of the sandy regions exceed the standard (50 mg l^{-1}) of the 1980 EU Drinking Water Quality Directive by a factor of up to five (Fraters *et al.*, 1998). As the quantity of extractable groundwater for human consumption became limited, additional water from the rivers Rhine and Meuse has to be purified, at high costs.

To be sustainable, livestock production systems must provide adequate income for farmers, in a way that is acceptable to society. In particular, there is demand for a clean and attractive environment and for efficient use of resources, particularly non-renewable resources such as fossil energy, and resources for which alternative demands exist, such as groundwater. Dairy farms could

probably meet environmental standards through extensification, i.e. by expanding farm size to reduce milk production intensity per hectare. However, land is very expensive and therefore extensive farming probably will not be sustainable from an economic point of view. Moreover, a societal demand exists for alternative use of available land, like expanding nature reserves. Export of slurry, to increase farm output of nutrients, is also expensive and may lead to environmental problems elsewhere. Improved resource management, associated with reduced inputs of fertilisers, water and concentrates, would be the most attractive option. To investigate the feasibility of such a strategy, farm systems research was started in 1988, including validation of a prototype system, in theory meeting strict environmental goals, on an experimental farm, called 'De Marke'. This paper summarises the main results of that prototype system and discusses their significance for the opportunities of dairy farming. Results are compared with those of a current commercial farm with a comparable intensity of milk production. Research methodology, data collection methods, detailed results and comparison of farm performance with predicted performance based on model calculations, are described in detail elsewhere (Aarts *et al.*, 1992; Aarts *et al.*, 2000 a,b; 22 'De Marke'-reports).

Methods and materials

Research approach

Characteristic for dairy farming systems is the combination of plant and animal production. By exchanging manure and forage between the plant and animal components, nutrients cycle through the system, leading to losses to air and water. Single nutrient flows can be influenced, but intervening in one may affect flows elsewhere in the cycle. Because of these interactions, whole farm research is needed for identification of attractive sets of measures, leading to substantial reductions in losses (Jarvis *et al.*, 1996). However, that presents two major methodological problems: (a) replicates are hardly possible, because of specific farm conditions, and (b) these specific conditions hamper extrapolation of results to other farms.

An attractive solution to these problems is to combine system modelling and system prototyping. Modelling is used to combine knowledge and to generate systems that, in theory, realise the identified system objectives for an average

intensive dairy farm on sandy soil. Implementation in practice (prototyping) of one of these theoretical systems provides the opportunity to test the formulated hypotheses and validate the model results on which system design was based. Besides, a prototype can be demonstrated to and discussed with farmers during visits, stimulating introduction of improvements on commercial farms and generating new ideas for improvement of the prototype.
Since the prototype system is unique, results cannot be evaluated statistically in the conventional way. Therefore, results of an extensive monitoring program and of additional disciplinary research have been used to understand the functioning of the experimental system and to evaluate the quality of the underlying models. Improved models can be used as a tool to support adaptation of commercial farms.

System objectives

The environmental goals to be realised in the prototype system are more ambitious than those formulated in government legislation for introduction until the year 2008 (Van den Brand & Smit, 1998). The main reasons are that the latter do not absolutely guarantee the desired quality of the environment in regions with light sandy soils. Moreover, imaginable agricultural problems associated with realising environmental goals, like a decrease in soil fertility, will come to the fore earlier and more pronounced.
In accordance with the 1980 EU Drinking Water Quality Directive, a maximum of 50 mg nitrate l^{-1} in the upper groundwater was selected, a reduction of about 75% compared to the current situation in sandy areas (Table 1). Ammonia emissions from faeces and urine should not exceed 30 kg N ha^{-1}, about 50% of the current average. Emission of nitrous oxide should be reduced from 9 to 3 kg N ha^{-1}. Total farm surpluses should not exceed 128 kg N ha^{-1} and 0.45 kg P ha^{-1}. All manure should be applied on the farmland, so export of slurry to increase output of nutrients is not permitted.
The system aims at maximising 'production' of groundwater of high quality. Therefore, sprinkling is only acceptable in emergency situations, to prevent early death of the crop, with the consequence of high costs for reseeding. Besides, reseeding 'permanent' grassland can lead to excessive leaching of nitrate, as a result of mineralisation of the accumulated organic N in the upper soil layers. Moreover, sprinkling is permitted to guarantee fresh grass supply

Table 1. System objectives with regard to nutrients.

Objective	Maximum value
Nitrate leaching	50 mg nitrate l^{-1} in upper ground water
Ammonia volatilisation	30 kg N ha^{-1} yr^{-1} from manure
Losses of nitrous oxide	3 kg N ha^{-1} yr^{-1}
N surplus	128 kg N ha^{-1} yr^{-1} as farm inputs (including deposition and fixation by clover) minus outputs, assuming no accumulation in soil organic matter
P leaching	0.15 mg P l^{-1} in upper ground water
P surplus	0.45 kg P ha^{-1} yr^{-1}, deposition included

for restricted grazing, as grazing is desirable from the point of view of animal welfare. Use of herbicides is minimised through application of mechanical weed control and crop rotation. If chemical control is unavoidable, only 'environmentally save' herbicides are allowed.

Lay out of the prototype system

A prototype system was implemented at experimental farm 'De Marke'. The 55 hectares of land were reclaimed from heather at the beginning of the 20th century. An upper layer of 25 to 30 cm with an organic matter content of 4.8 % overlies a layer of yellow sand, extremely low in organic matter (podzol soil). Groundwater depth is 1 to 3 m below soil surface, too deep for substantial capillary rise into the root zone. Close to the farm, 5 Mm^3 groundwater is extracted annually by a drinking water company.

The drought sensitive sandy soil location was selected deliberately by involved scientists, as environmental problems tend to be most prominent here, and efficient management of nutrients and water most difficult. In 1989 the land was acquired and it has been used since as intended. However, until 1992 no cattle were present and no organic fertilisers were used.

As shown in Table 2, the proportion of grassland in the prototype system is smaller than on the current commercial farm, and the proportion of maize consequently larger. The main reason is the demand for energy-rich feed with a low N content, to compensate for the rather high N contents of the grass

products in the ration. Moreover, the water and fertiliser requirements per unit harvestable dry matter of grass are much higher than of maize (Aarts *et al.*, 1996). Nevertheless, also at 'De Marke' the area of grassland exceeds that of maize, because grass can be grazed and can utilise more animal manure as it takes up nutrients in larger quantities than maize.

The farm area is divided in permanent grassland (close to the farm buildings, convenient because cows are kept indoors during parts of the day) and two crop rotations; crop rotation I, at only a short distance from the buildings, and rotation II further away. In crop rotation I, a three-year grassland period is followed by three years arable cropping, in crop rotation II by five. In the first year after the grass period maize is not fertilised. In all years, Italian ryegrass is sown as a catch crop between the rows in June, to take up excess fertiliser and N mineralised after harvest of the maize. Moreover, it creates possibilities for grazing the maize land in autumn and spring.

Fertiliser N application is about 40% less than on commercial farms, and does not exceed 250 kg ha^{-1} for grassland and 100 kg for maize, including N from slurry, clover and the anticipated contribution of Italian ryegrass and grass sod after ploughing. Mineral N fertilisers are only applied on grassland, on average

Table 2. Main characteristics of prototype system 'De Marke' and of the hypothetical commercial farm with a comparable intensity of milk production (1994 – 1997).

	'De Marke'	Commercial farm
Cattle		
- Milk per cow (kg yr^{-1})	8200	7250
- Cows ha^{-1}	1.45	1.64
- Young stock ha^{-1}	1.0	1.5
- Grazing season	1/5 – 1/10	1/5 – 1/11
- Daily grazing (hours, average season)	8	14
Soil and crops		
- Grassland (%)	55	75
- Maize land (%)	45	25
- Crop rotation	Yes	No
- Catch crop after maize	Yes	No

124 kg ha^{-1} annually. About 75 % of the slurry produced by the cattle is applied on grassland, on permanent grassland annually on average 49 m^3 ha^{-1} (24 kg P and 90 kg plant available N), on rotational grassland 72 (37 kg P and 133 kg N). Maize receives on average 26 m^3 ha^{-1} (12 kg P and 58 kg N). No fertilisers are applied between 15th August and 1st March, because of the risk of nitrate leaching due to the precipitation surplus and low crop demand.
Farm milk quota is 658,000 kg yr^{-1} (11,890 kg ha^{-1} yr^{-1}). Annual milk yield per cow is considerable higher than on the commercial farm. As a result, per unit of milk less feed is required, and the number of young stock for the replacement of cows is less as well. Composition of the feed rations aims at maximising utilisation of N in the feed for milk and weight gain, to reduce potential losses from manure (Paul *et al.*, 1998). In summer, dairy cattle are allowed limited grazing for two periods each day, with an intermediate resting period indoors ('siesta grazing'). During this period, cows are fed silage maize. This results in a more even distribution of high (grass) and low (maize) protein products over the 24-hour period, and a lower number of urine patches in the pasture. A short-duration rotational grazing system is practised (to reduce grazing losses) and early housing, i.e. 1st October at the latest, one month earlier than on commercial farms (to limit losses from urine patches). To restrict ammonia losses indoors, residence time of excreta outside the closed storage is minimised by frequent use of a dung scraper.

Data collection and data analyses

Where feasible, mass flows (like harvested crop material, applied slurry, purchased concentrates and distributed forage) are quantified by weighing, related nutrient flows by chemical analyses of samples. Crop yields are determined per plot by weighing prior to silage making. Fresh grass consumption by cattle is calculated per plot by estimating standing biomass just before and directly after grazing, and taking into account growth during grazing.
At the end of the year, the upper groundwater is sampled by the National Institute of Public Health and Environment (RIVM) at 137 points from bore holes, extending to 0.8 m below the groundwater table (Fraters *et al.*, 1998). In 1989, and annually from 1994 onwards, soil samples of the rooted zone (0-30 cm) were taken in the winter period to determine nutrient contents and soil fertility status. For that purpose, the farm is divided in 51 blocks of about 1

ha each. Mineralisation is measured continuously, denitrification occasionally, on 6 plots of 400 m^2.
Feed intake indoors is measured by weighing all feed entering the stable. Quantities of nutrients excreted in the stable are determined as produced slurry volume multiplied by nutrient contents, corrected for volatilisation indoors. Ammonia volatilisation indoors is measured continuously, volatilisation during grazing or following slurry application occasionally, to check the emission factors derived from literature (Biewinga *et al.*, 1992; Leneman *et al.*, 1998). Nutrients in faeces and urine, excreted during grazing, are estimated from the input in feeds by subtracting output in milk and meat and excretion indoors.
Performance of the prototype system is compared with that of a hypothetical commercial farm on sandy soil with a comparable intensity of milk production, derived from recent studies (Anonymous, 1998; Daatselaar *et al.*, 1998; Fraters *et al.*, 1997) and described in the appendix of this paper. In general, system characteristics of that farm are similar to the averages of characteristics of dairy farms on sandy soils, as derived from statistical surveys (Beldman & Prins, 1999).

Results

External resources

The gap between cattle feed requirements and net crop yields has to be filled by purchased feeds. Results of field trials have shown that yields are 8-10% below those of crops, fertilised in accordance with standards for a commercial farm. However, because of reduced grazing and conservation losses and because of a larger maize area (maize yields are higher than grass yields), average net crop yields (intake by cattle) were even higher. Combined with lower feed requirements, due to lower numbers of milking cows and young stock, purchases of feeds could be reduced greatly (Table 3). Feed requirements were covered for about 84% by home-grown feeds, compared to 64% on the commercial farm.
Input in purchased N fertilisers could be reduced by 71%, as a result of more efficient utilisation of 'home-made' fertilisers, reduced fertilisation levels and an increased maize area. The use of external P-fertilisers could be avoided

Table 3. External resources, used by the prototype system 'De Marke', and reductions compared to the hypothetical commercial farm (1994 – 1997).

	Input	Reduction (%)
Mineral fertilizer-N (kg ha^{-1})	69	71
Mineral fertilizer-P (kg ha^{-1})	0	100
Purchased feed (kg dry matter ha^{-1})	2015	58
Water consumed by crops (m^3 ha^{-1})	3670	13
Energy, direct (MJ ha^{-1})	11020	-9
Energy, indirect (MJ ha^{-1})	33060	58

completely from 1994 onwards. Reduced inputs of feeds and fertilisers also resulted in lower inputs of heavy metals. As a result, annual surpluses of copper (Cu), cadmium (Cd) and zinc (Zn) on the experimental farm were –7, -1.1 and 96 g ha^{-1}, respectively, compared to 25, 1.2 and 130 g ha^{-1} on the commercial farm. Permanent grassland and grassland in crop rotation I were irrigated, mostly four times a year, with on average 96 mm water (960 m^3 ha^{-1}), maize with only 20 mm. Mainly because of a reduced area grassland, restricted fertilisation and restricted irrigation at 'De Marke' (crop rotation II was not irrigated at all), estimated average water consumption was 57 mm (570 m^3 ha^{-1}) lower than at the commercial farm (Aarts *et al.*, 1999).
Direct energy consumption (as fuel and electricity) exceeded that of the commercial farm. This is mainly due to mechanical weed control, additional soil cultivation (temporary grassland), and the use of a dung scraper. However, indirect energy consumption is low, because of lower needs for purchased fertilisers and feeds. As a result, total energy consumption was reduced by 50%.

Nutrient surpluses

As shown in Table 4, prototype system 'De Marke' realised much lower nutrient surpluses than the commercial farm, mainly because of lower inputs by fertilisers and feeds. Lower output in meat was due to the lower number of animals. N surplus was 62% below that of the commercial farm, P surplus even 94%. Even so, surpluses still exceed acceptable maximum levels and have to be reduced further in the coming years. As a result of considerably reduced inputs

Table 4. Nutrient balances (kg ha^{-1} yr^{-1}) realised for prototype system 'De Marke' and for the hypothetical commercial farm (1994 – 1997).

	Commercial farm		'De Marke'	
	N	P	N	P
Input:				
Concentrates	125.0	21.5	78.1	11.8
Forage	20.0	1.0	17.6	2.1
Mineral fertilizer	241.5	18.0	68.9	0.0
Organic fertilizer	50.0	12.5	0.0	0.0
Deposition	49.0	0.9	49.0	0.9
Others	0.0	0.0	12.7	0.9
Sum	*485.5*	*53.9*	*226.3*	*15.7*
Output:				
Milk	64.2	10.5	64.2	10.5
Cattle	14.0	4.1	8.9	2.7
Sum	*78.2*	*14.6*	*73.1*	*13.2*
Surplus	*407.3*	*39.3*	*153.2*	*2.5*
Efficiency (output/input)	*16%*	*27%*	*32%*	*84%*

and only slightly reduced outputs, efficiency of the farming system, defined as output divided by input, increased strongly.

Nitrogen cycle

The main N flows in system 'De Marke' and in the commercial system are presented in Figures 1 and 2. N in feed is used more efficiently at 'De Marke': about 23% of N consumed as concentrates, roughage and fresh grass is recovered in milk and meat, compared to 19% on the commercial farm. Minimum N requirements of lactating cows were exceeded by 3% (summer) and 8% (winter), of non-lactating cows by 39% (summer and winter) and of young stock by 180 and 36% in summer and winter, respectively (Van Der Schans, 1998). This is due to very low N requirements (non-lactating cows and young stock), continuous grazing (young stock) and the limited possibilities for

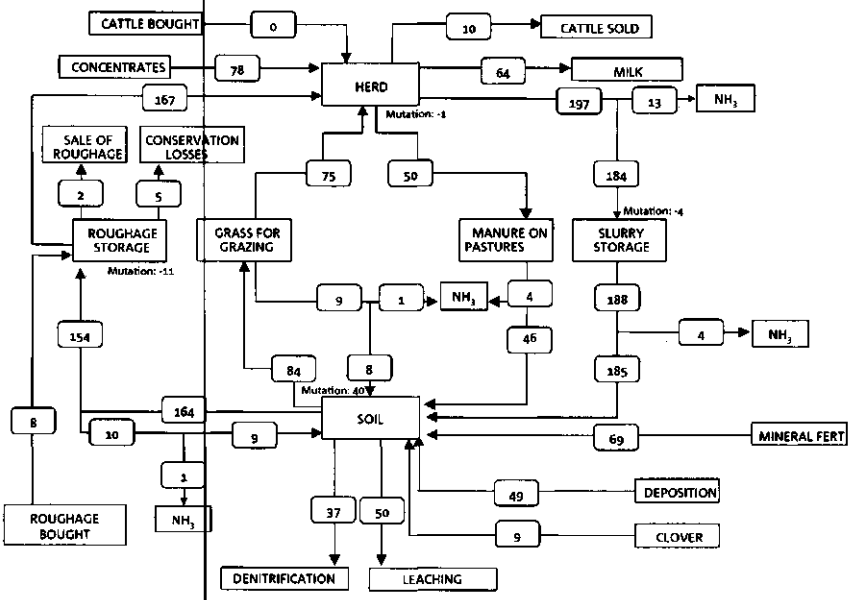

Figure 1. Nitrogen cycle of prototype system 'De Marke' (1993-1997, kg N ha^{-1}).

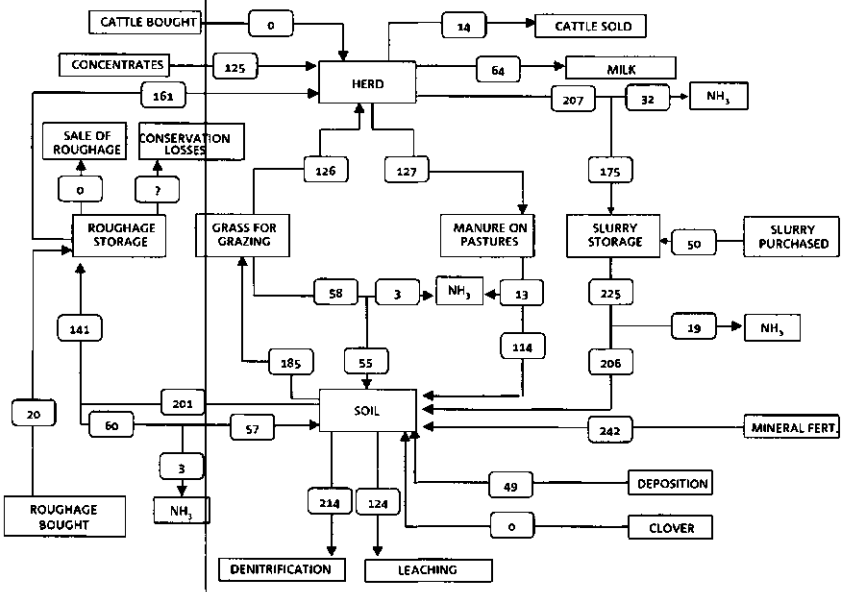

Figure 2. Nitrogen cycle of a commercial farm on sandy soil (1994-1997; kg N ha^{-1}).

individual feeding. Nevertheless, there is still scope for further reductions in the N surplus in the diet of the cattle. By restricting annual grazing time to about one third of that in commercial systems, excretion of N at pasture was with 50 kg ha^{-1} on average 20% of the total (50 kg at pasture + 197 kg indoors), compared to 38% on commercial farms. In total, 21 kg N ha^{-1} was lost as ammonia from excreta (13 kg from the stable + 4 kg from slurry after application + 4 kg from excreta produced during grazing), well below the maximum acceptable level of 30 kg and 67% below the level of the commercial farm (32 kg from the stable + 19 kg from slurry + 13 kg from grazing = 64 kg).
Total N supply to the soil, including lost forage caused by grazing (9 kg not consumed – 1 kg ammonia volatilisation = 8 kg return) and harvesting (10 kg – 1 kg = 9 kg), was 52% of that on a commercial farm. About 62% of the total soil input originated from excreta, compared to 44% at the commercial farm. N-contents of fresh grass (36 g kg^{-1} dry matter), grass silage (29 g) and maize silage (12 g) were 9 - 11% below those of crops grown on a commercial farm. Average yield of N per hectare was considerably lower, mainly because more land was used to grow maize. On average, 127 kg ha^{-1} of the N supplied to the soil was not recovered in the harvestable products (164 kg as roughage + 84 kg as grass for grazing), compared with 337 kg on the commercial farm. As a result, the efficiency of the soil/crop component of the 'De Marke' system was 66%, compared to 53% on the commercial farm. Estimated emission of N_2O on 'De Marke' was 5 kg ha^{-1}, on a commercial farm 9 kg ha^{-1}, mainly related to denitrification (Velthof & Oenema, 1997).
Slurry and roughage production in a particular year are not necessarily similar to slurry application and forage consumption, for instance because of weather conditions. That will cause mutations in the quantity of N stored as roughage and slurry. Also the quantity of N stored in cattle can vary a little from year to year. However, averaged over a long period mutations will be negligible.

Groundwater quality

Table 5 shows nitrate concentrations in the upper groundwater for fields that have been in use since 1989. The rapid fall to levels around the upper limit for nitrate (50 mg l^{-1}) is striking. In 1997, the concentration was again somewhat above that level. Nitrogen concentrations are the result of the combined effect of N quantities and quantities of water. The wet winters of 1993 and 1994 will

Table 5. Time course of nitrate concentration (mg l^{-1}) of the upper groundwater of prototype system 'De Marke'.

	1990	1992	1993	1994	1995	1996	1997
Permanent grassland	159	80	50	43	60	52	96
Rotation I	220	117	43	46	54	36	49
Rotation II	181	104	53	35	35	20	47
Farm	*199*	*107*	*47*	*43*	*51*	*35*	*57*

have resulted in low concentrations, mainly due to dilution, although high rainfall does not always result in lower concentrations. A period of high precipitation in early summer of 1997 probably caused leaching of fertiliser, because of a restricted time for crop uptake. In addition, high rainfall during the growing season may have resulted in accelerated breakdown of organic material that contains N. The effect of land use on nitrate concentration is shown in Table 6. The alarmingly high values for permanent grassland and grassland in rotation I is probably due to intensive grazing on those fields. The 'safe' nitrate concentrations for the less intensively grazed grassland of rotation II and for maize are more or less equal. Average P content in the upper groundwater at 'De Marke' was 0.01-0.06 mg l^{-1} and therefore in all years far below the maximum acceptable value (0.15 mg l^{-1}).

Table 6. Average concentration of nitrate (mg l^{-1}) in the upper groundwater below grass and maize of prototype system 'De Marke' (1995–1997).

	Grass	Maize
Permanent grassland	71	–
Crop rotation I	49	39
Crop rotation II	36	42
Farm	*55*	*40*

Table 7. Average soil characteristics (0–30 cm; mg per 100 g dry soil, for organic matter g per 100 g dry soil; P-total and P-Al as usual expressed as P_2O_5).

	1989	1994	1995	1996	1997
Organic matter	4.8	4.9	4.8	4.6	4.7
N-total	142	144	138	149	157
P-total	169	165	166	162	164
P-Al	75	69	64	65	65

Soil characteristics and crop production

Results of soil analyses suggest an average increase in organic N (N-total) with 1 mg per 100 g dry soil annually, corresponding with about 40 kg N $ha^{-1}yr^{-1}$ (Table 7). Differences in net mineralisation of up to 90 kg N ha^{-1} yr^{-1} were found among years. In general, mineralisation was positively correlated with rainfall during the growing season. As organic matter content remained essentially constant, C:N ratio decreased from 19.6 in 1989 to 17.4 in 1997, assuming organic matter contains 58% C.

Soil P-fertility status, expressed as P-Al (ammonium lactate extractable phosphate; Van Der Paauw, 1956), decreased until 1995, by on average 15%. As P-total hardly decreased, P solubility must have declined. From 1995 onwards, P-Al stabilised at levels considered sufficient from an agricultural point of view (Aarts *et al.*, 2000 a). Although N defiency reduced yields of maize and grass to about 90-92% of those obtained at commercial farms, the major yield determining factor at 'De Marke' is availability of water (Habekotté & Hilhorst, 1998). In the period 1993-1998 annual average crop yields varied between 8,000 and 10,100 kg dry matter ha^{-1} for grass (with 9,200 kg as average) and between 9,000 and 12,000 kg for maize (with 10,600 kg as average).

Economics

As shown in Table 8, realisation of the strict environmental goals at the prototype system increased costs of milk production by 4.8 cents (0.02 EURO) to

Table 8. Additional costs of milk production (cents kg^{-1} milk) of prototype system 'De Marke', due to strict environmental goals (based on De Haan & Mandersloot, 1998).

	Additional costs
Labor farmer	0.6
Contractor	2.3
Housing/equipment	2.6
Others	0.8
feed/fertiliser	-1.5
Total	*4.8*

90.1 cents kg^{-1} (De Haan & Mandersloot, 1998). Especially contractor costs were higher, mainly due to reduced grazing (more silage produced and more slurry to be applied) and crop rotation (establishing temporary grassland). Also adapted housing (stable with low emission characteristics), an expanded slurry storage and additional equipment (mechanical weed control) increased costs. Labour requirements were higher, mainly because of restricted grazing (feeding cows indoors) and mechanical weed control. Savings on feeds and fertilisers only partially compensated these additional costs. Because a commercial farm produces about 360,000 kg milk annually, the decrease in income is considerable. Fortunately, a reduction in cost by further research is expected. Nevertheless, effects of environmental targets on farmers income deserves attention of society, as society harvests benefits.

Discussion

To reach definite conclusions, a much longer research period is needed, as obviously most of the characteristics of the prototype system are still in transition. However, the research results obtained so far, present indications, helpful in discussing possible development strategies for dairy farming.
How far can input of external resources be reduced by improved management, while maintaining intensity of milk production and soil fertility? Purchases of fertilisers and feeds were more than halved in the prototype system, compared to current farming systems. Reductions in purchased feeds, mainly because of

more judicious feeding and a higher milk production per cow, decreased inputs of nutrients with 34% (N) and 38% (P). Purchases of organic and mineral fertilisers could be reduced by 76 (N) and 100% (P), as a result of improved utilisation of manure, reduced fertilisation levels and an increased maize area. Reduced crop yields, as a result of lower fertilisation levels, could be compensated by reduced conservation and grazing losses. Reduced irrigation and fertilisation and an increased maize area resulted in an average reduction in water consumption by crops of 570 m^3 ha^{-1}. Soil fertility changes did not negatively affect crop yields and serious problems are not expected. There is still scope for further reductions of the inputs of the prototype system.

Did improved resource management lead to the desired quality of the environment? Average nitrate contents in the upper groundwater decreased very rapidly from 200 to around 50 mg l^{-1}, the permitted upper limit. However, nitrate content seems to be above the acceptable level, if grassland is grazed rather intensively. Therefore, research should pay attention to identification of the maximum acceptable intensity for grazing. Moreover, above-average winter rainfall in the trial period may have contributed to the observed rapid decrease. Observations are contrary to model-calculated delayed response times of more than 20 years, due to the time needed to establish a new mineralization-immobilization equilibrium in the upper soil layers (Oenema & Roest, 1998).

The average realised surplus of 153 kg N $ha^{-1}yr^{-1}$ presumably consists of 21 kg ammonia-N from manure, 50 kg nitrate-N leached to groundwater, 40 kg accumulation in soil as organic-N, 37 kg N denitrified (including 5 kg nitrous oxide-N) and 5 kg losses (form unknown) during and after conservation of roughage. This surplus exceeds the target value (128 kg N ha^{-1} yr^{-1}), but accumulation as organic-N in the soil was not anticipated. The C:N ratio decreased from 19.6 in 1989 to 17.4 in 1997. Because C:N ratios in comparable (podzol) sandy soils are between 15 and 20 (Hassink, 1994) it is difficult to forcast when accumulation will stop.

Magnitude and direction of changes in the soil store strongly depend on moisture supply. Under more favourable soil moisture conditions, the rate of decomposition of organic material was higher. When the change in soil N store is not considered, a high N surplus in a dry year (causing an increase in soil N store and therefore deactivating surplus partially) can be less damaging to the environment than a low surplus in a wet year (causing a decrease in soil N store). The experimental period is still too short for estimating the influence of the farming system on the 'equilibrium-level' of the soil organic N store. That

value is, however, important in determining the environmental impact of the farm surplus over a longer time period.

What are the financial costs and profits of realising environmental goals by improved utilisation of resources in dairy farming? Realising the strict environmental goals of the prototype system increased costs of milk production by 5% (0.02 EURO kg^{-1} milk and 240 EURO ha^{-1}). However, model calculations suggest that realising the less strict governmental goals for the period until 2002 could even be profitable, as the financial benefits of reduced inputs overcompensate the additional costs. Performance of high-quality commercial farms supports results of modelling, indicating that improved utilisation of resources can reduce surpluses by at least 30%, without increasing costs. However, such a reduction is insufficient in the long term, to guarantee the desired quality of the environment.

Costs for purification are 0.44 EURO per m^3 higher for surface water than for groundwater (pers. comm. L. Joosten, Netherlands Drinking Water Association). Hence, 250 EURO ha^{-1} can be saved, when the 570 m^3 water ha^{-1}, less consumed by the crops in the prototype system, is available for production of drinking water, substituting surface water. Besides, consumers prefer groundwater, instead of water from polluted rivers. These benefits exceeds the total costs of realising the strict environmental targets of the prototype system. In the Netherlands, average annual per capita water consumption is 50 m^3, i.e. the additional groundwater production of 570 m^3 ha^{-1}, realised at 'De Marke', can replace surface water for 11 individuals. At the farm size of 55 ha, more than 600 persons could profit from improved resource management if farmer is financially rewarded for.

Conclusions and perspectives

Research results of the prototype system suggest that, in principle, even on light sandy soils, strict environmental targets can be attained after a relatively short period of adaptation, while maintaining the current milk production intensity and without the need to export slurry at high costs. Improved resource management in all parts of the system is essential to realise the required reduction in purchased feeds and fertilisers. In the future, additional cost could be compensated by society to maintain farmers income on an acceptable level, justifiable because of increased groundwater 'production' or improved quality of nature.

Less strict environmental goals as formulated by the government for the next years permit above-average milk production intensities. However, management comparable to that of the experimental system requires very skilled farmers. Therefore, in a new research project ('Cows & Opportunities'), 12 farmers will be strongly supported in adapting farm management, following the strategy of improved resource management and using the experiences of 'De Marke'. These farms represent the full range of conditions for dairy farming in the Netherlands, hence most Dutch farmers can identify themselves with one of those farmers. Already in 2002 these farms have to reduce the nutrient surpluses to the maximums, defined by the government for the year 2008.

Acknowledgements

The 'De Marke' project financing is shared equally among the Ministry of Agriculture, the Ministry of Environment and Farmers Union. The scientific help of H. van Keulen (AB-DLO) is thankfully mentioned by the members of the project team, the authors of this paper.

References

Aarts, H.F.M., E.E. Biewinga & H. van Keulen, 1992.
Dairy farming systems based on efficient nutrient management. Netherlands Journal of Agricultural Science *40: 285–299.*

Aarts, H.F.M., C. Grashoff & H. van Keulen, 1999.
Managing dairy farming systems for groundwater conservation in the sandy regions of the Netherlands. Report 101. Institute for Agrobiological and Soil Fertility Research (AB-DLO), Wageningen, 22 pp.

Aarts, H.F.M., C. Grashoff & H.G. Smid, 1996.
Evaluation of perennial ryegrass, lucerne, silage maize and fodder beets under drought. In: Parente G., J. Frame & S. Orsi (Eds.) Proceedings of the 16th meeting of the European Grassland Federation. Grassland Science in Europe. *Vol. 1, British Grassland Society, Reading, United Kingdom pp. 363-366.*

Aarts H.F.M., B. Habekotté & H. van Keulen, 2000a.
Phosphorus (P) management in the 'De Marke' dairy farming system. Nutrient Cycling in Agroecosystems *(in press).*

Aarts, H.F.M., B. Habekotté & H. van Keulen, 2000b.
Nitrogen (N) management in the 'De Marke' dairy farming system. Nutrient Cycling in Agroecosystems *(in press).*

Anonymous, 1998.
Manure and mineral production 1997 (in Dutch).
Statistisch Bulletin 37, 24/9/98, Centraal Bureau voor de Statistiek (CBS), Voorburg.

Beldman, A.C.G. & H. Prins, 1999.
Analysis of differences in mineral surpluses on specialised dairy farms (1996/1997) (in Dutch). Report 2.99.01. Agricultural Economics Institute (LEI-DLO), The Hague, 42 pp.

Biewinga, E.E., H.F.M. Aarts & R.A. Donker, 1992.
Dairy farming under strict environmental norms (in Dutch), Report 1, 'De Marke', Hengelo, 284 pp.

Daatselaar, C.H.G., D.W. de Hoop, B.W. Zaalmink & T. de Haan, 1998.
'De Marke' and its target values for farm economics. Rapport 'De Marke' no. 21, Hengelo (in Dutch)

De Haan, M.H.A. & F. Mandersloot, 1998.
Environmental goals 'De Marke' in economic perspective (in Dutch). Report 'De Marke', Hengelo

Fraters, B., H.A. Vissenberg, L.M.J. Boumans, T. De Haan & D.W. de Hoop, 1997.
Results of monitoring programme upper groundwater agricultural holdings in the sandy areas 1992-1995 (in Dutch). Report 714801014, National Institute of Public Health and Environment (RIVM), Bilthoven, 181 pp.

Fraters, D., L.M.J. Boumans, G. van Drecht, T. de Haan & D.W. de Hoop, 1998.
Nitrogen monitoring in groundwater in the sandy regions of the Netherlands. In: K.W. Van Der Hoek, J.W Erisman, S. Smeulers, J.R Wisniewski & J. Wisniewski (Eds.) Proceedings 1st International Nitrogen Conference, Noordwijkerhout, pp. 479-485.

Habekotté B. & G.J. Hilhorst, 1998.
Yield and quality of mais in relation to P-status of the soil at 'De Marke'. In: Habekotté, B., H.F.M. Aarts, W.J. Corré, G.J. Hilhorst, H. Van Keulen, J.J. Schröder, O.F. Schoumans & F.C Van Der Schans (Eds.) Sustainable dairy farming and phosphorus management (in Dutch). Report 92, Institute for Agrobiological and Soil Fertility Research (AB-DLO), Wageningen, pp. 65-85.

Hassink, J., 1994.
Effects of soil texture and grassland management on soil organic C and N and rates of C and N mineralization. Soil Biology & Biochemistry *26: 1221-1231.*

Jarvis, S.C., R.J. Wilkins & B.F. Pain, 1996.
Opportunities for reducing the environmental impact of dairy farming management: a system approach. Grass and Forage Science *51: 21-31.*

Leneman, H., D.A. Oudendag, K.W. van der Hoek & P.H.M. Janssen, 1998.
Focus on emission factors: a sensitivity analysis of ammonia emission modelling in the Netherlands, In: K. W. Van Der Hoek, J. W. Erisman, S. Smeulers, J. R. Wisniewski & J. Wisniewski (Eds.), Proceedings 1st International Nitrogen Conference, Noordwijkerhout, pp. 205 -211.

Oenema, O. & C.W.J. Roest, 1998.
Nitrogen and phosphorus losses from agriculture into surface waters; the effects of policies and measures in the Netherlands. Water Science and Technology *37: 19-30.*

Paul, J.W., N.E. Dinn , T. Kannangara & L.J. Fisher, 1998.
Protein content in dairy cattle diets affects ammonia losses and fertilizer nitrogen value. Journal of Environmental Quality *27: 528-534.*

Van den Brandt, H.P. & H.P. Smit, 1998.
Mineral accounting: the way to combat eutrophication and to achieve the drinking water objective. Environmental Pollution *102: 705-709.*

Van der Paauw, F., 1956.
Calibration of soil test methods for the determination of phosphate and potash. Plant and Soil 8: 105-125.

Van der Schans, F.C., 1998.
P in feed at 'De Marke' (in Dutch). In: Habekotté, B., H.F.M. Aarts, W.J. Corré, G.J. Hilhorst, H. Van Keulen, J.J. Schröder, O.F. Schoumans & F.C van der Schans (Eds.), Sustainable dairy farming and phosphorus management. Report 92, Institute for Agrobiological and Soil Fertility Research (AB-DLO), Wageningen, pp. 101-126.

Velthof, G.L. & O. Oenema, 1997.
Nitrous oxide emission from dairy farming systems in the Netherlands. Netherlands Journal of Agricultural Science *45: 347-360.*

Appendix

The N cycle of a hypothetical commercial dairy farm on sandy soil in the mid-nineties

The N-cycle of a commercial dairy farm on sandy soil in the mid-nineties, with a production intensity comparable to that of 'De Marke' (11,890 kg milk ha^{-1}) and with rather 'average' characteristics, can not be determined directly, because such a farm does not exist in reality. Therefore, the N-cycle of such a farm has to be constructed from data, collected for other purposes, and interpreted by best professional judgment. The N cycle constructed in this way, may not be very accurate, but highlights the deviations from the N cycle of farming system 'De Marke'. In this appendix, the method followed in the construction of the N cycle for the commercial farm is explained.

Beldman & Prins (1999) collected data to analyse N surpluses of 342 specialised dairy farms, representative for all Dutch farms in 1996. To compare the financial results of 'De Marke', in 1994 and 1995, with those of commercial farms on sandy soil with a comparable intensity, data of about 20 farms were analysed by Daatselaar *et al.* (1998). Fraters *et al.* (1997) measured the nitrate content of the upper groundwater of about 12 specialised dairy farms on sandy soil and related the results to farm data (1995).

Combination of the results of these surveys shows that in general 75% of the farm area is in use as grassland, and the remaining 25% is used to grow silage maize. Grass fields are cut twice annually, to make silage, and grazed three or four times. Milk production per cow is 7,250 kg yr^{-1} (4.4% fat and 3.5% protein), hence for the assumed production intensity, dairy cow density is 1.6 ha^{-1}. Numbers of calves and heifers are 0.8 and 0.7 ha^{-1}, respectively. Farm output of N in milk is thus equal to that of 'De Marke', at 64 kg ha^{-1}. Because of the higher number of milking cows, heifers and calves, output of N in cattle is higher (14 kg ha^{-1}). All slurry produced by cattle is used on the farm, as is the homegrown feed. Therefore, total farm output is the sum of N in sold milk and cattle: 78 kg ha^{-1}.

Input of mineral N-fertilizer is 242 kg ha^{-1} (grassland 312 kg ha^{-1} and maize 30 kg ha^{-1}). In contrast to the mid-eighties, dairy farmers also import organic fertilizers. About 50 kg N ha^{-1} is 'bought' as slurry from specialized pig farms in the vicinity. These farms have a slurry surplus, because farm area is small and new governmental rules restrict slurry application per hectare. The dairy farm

produces less slurry than maximum applicable and therefore can accommodate slurry from neighboring farms. Atmospheric deposition is assumed to be comparable to that at 'De Marke' at 49 kg ha^{-1}. N fixation by clover is not of importance on commercial farms, because of the high N fertilization level of grassland. Farm N input in concentrates is 125 kg ha^{-1} (3,600 kg dry matter), with roughage 20 kg (1,000 kg dry matter, mainly silage maize). Total farm input with fertilizers, feeds and deposition is 485 kg N ha^{-1} and surplus, i.e. input minus output, 407 kg N ha^{-1}.

Total energy consumption of cattle can be estimated by multiplying the number of cows, heifers and calves with the feeding standards, consumption from home-grown feed by subtracting energy in purchased feeds from total energy consumption. Based on the energy contents of grass and forage maize, roughly 9,000 kg dry matter ha^{-1} must have been consumed as home-grown feed. Gross dry matter yield of maize is about 12,500 kg ha^{-1} (Anonymous, 1998a), and net dry matter yield, after subtracting conservation and feeding losses, about 11,000 kg ha^{-1}. As a consequence, net grass yield has to be 8,500 kg dry matter ha^{-1}. It is supposed that 4,400 kg is consumed indoors as silage and 4,100 kg during grazing. N-contents of grass, grass silage and maize silage (4.2%, 3.2% and 1.3% of dry matter, respectively) are supposed to be equal to the averages of the samples of commercial farms, analyzed by the Dutch Farmers Laboratory for Soil and Crop Analyses (Van der Schans, 1998). By multiplying net dry matter yields with N contents, consumption of N in home-grown feed is calculated as 267 kg ha^{-1}. Total consumption of N by the cattle is the sum of consumption in home-grown and purchased feed: 412 kg ha^{-1}. As 78 kg N ha^{-1} is converted into milk and meat, 334 kg ha^{-1} will be excreted in urine and faeces. That quantity corresponds reasonably well to the value calculated by multiplying cattle number with annual excretion standards for dairy farms on sandy soils (Anonymous, 1998b), which yields 312 kg N ha^{-1}. Partitioning of the excreted N over pasture (during grazing, 127 kg ha^{-1}) and stable (207 kg ha^{-1}) follows from the excretion standards for the summer and winter period.

Losses of ammonia from excreta have been calculated by multiplying the estimated N flows with emission standards (Leneman *et al.*, 1999). About 15% of the N excreted indoors will volatilise from the floor shortly after excretion, or during storage (32 kg ha^{-1}). Therefore, 175 kg N ha^{-1} is available for application as organic fertilizer. About 19 kg ha^{-1} (8%) of the nitrogen in cattle and pig slurry will volatilise as ammonia during and after application. Losses as ammonia during grazing are assumed to be 10% of the excreted N.

Gross yields of well-fertilized 'commercial' grass and maize crops and the associated N contents are well known from field experiments on 'De Marke'. By subtracting net yields, N losses can be estimated. Losses are highest on grassland, because of grazing and the field period in silage making. Losses are supposed to return to the soil. During that process, roughly 5% of the N is assumed to be lost as ammonia.

Literature

Anonymous, 1998a.

Agricultural and horticultural data 1998 (in Dutch), Statistics Netherlands (CBS), Voorburg.

Anonymous, 1998b.

Manure and mineral production 1997 (in Dutch). Statistisch Bulletin 37, 24/9/98, Statistics Netherlands (CBS), Voorburg.

Beldman, A.C.G. & H. Prins, 1999.

Analysis of differences in mineral surpluses on specialised dairy farms (1996/1997) (in Dutch). Report 2.99.01. Agricultural Economics Institute (LEI-DLO), The Hague, 42 pp.

Daatselaar, C.H.G., D.W. de Hoop, B.W. Zaalmink & T. de Haan, 1998.

'De Marke' and its target values for farm economics. Rapport 'De Marke' no. 21, Hengelo (in Dutch)

Fraters, B., H.A. Vissenberg, L.M.J. Boumans, T. De Haan & D. W. De Hoop, 1997.

Results of monitoring programme upper groundwater agricultural holdings in the sandy areas 1992-1995 (in Dutch). Report 714801014, National Institute of Public Health and Environment (RIVM), Bilthoven, 181 pp.

Leneman, H., D.A. Oudendag, K.W. van der Hoek & P.H.M. Janssen, 1998.

Focus on emission factors: a sensitivity analyses of ammonia emission modelling in the Netherlands.. In: K.W. Van Der Hoek, J.W. Erisman, S. Smeulers, J.R Wisniewski & J. Wisniewski (Eds.) Proceedings 1st International Nitrogen Conference, Noordwijkerhout, pp. 205-225.

Van der Schans, F.C., 1998.

P in animal feeding at De Marke (In Dutch). In: B. Habekotté., H.F.M. Aarts, W.J. Corré, G.J. Hilhorst, H. van Keulen, J.J. Schröder, O.F. Schoumans & F.C. van der Schans (Eds) Sustainable dairy farming and P management. AB-DLO rapport no. 92, Wageningen pp. 101-126..

Als ge een boer boeraf wilt maken koopt hem dan zijn jong vee af en geef hem oude paarden present.

Pastoor H.W. Roes, 1908. Bemesting op zandgrond. Boerenbond Deurne

Limits to intensity of milk production in sandy areas in the Netherlands

Netherlands Journal of Agricultural Science (in press)

Limits to intensity of milk production in sandy areas in The Netherlands

H.F.M. Aarts*, B. Habekotté & H. van Keulen

Plant Research International, P.O. Box 16, NL 6700 AA Wageningen, The Netherlands
*corresponding author (fax:+31-317-423110; e-mail: h.f.m.aarts@plant.wag-ur.nl)

Received 29 November 1999; accepted 11 February 2000.

Abstract

Agricultural land in sandy areas is mainly in use by dairy farms. As a result of intensive fertilisation and irrigation, environmental quality is threatened by lost nutrients and lowered groundwater levels. Therefore, Dutch government put decreasing limits to losses of nutrients, with lowest values for well-drained sandy soils. Besides, use of groundwater for irrigation will be restricted. Reducing milk production per hectare can be effective to reduce nutrient losses but is costly, as is the increase of output of nutrients by exporting manure. Improved resource management, leading to reduced inputs per kg milk, might be a more attractive option to realise both environmental and economic goals. This paper describes a procedure to quantify the impact of management on the limits of milk production per hectare on well-drained sandy soils, at defined maximum levels of permitted nutrient losses. The procedure has been applied to a range of farming systems, in order of increasing complexity of nutrient management. It is concluded that current average milk production intensity (12,400 kg ha^{-1} yr^{-1}) has to be reduced drastically if farm management is not successful in increasing the conversion of dietary N (into milk and body weight) and the re-use of N in manure. On the other hand, results suggest that an intensity of almost 15,000 kg $ha^{-1}yr^{-1}$ should be attainable by best farmers.

Keywords:

resources, management, nutrients, nitrogen, N, nitrate, dairy farming, milk production, systems research, limits, environment, sandy soils, groundwater

Introduction

The sandy soils in the Netherlands are mainly used for forage production for dairy cattle, with 520,000 ha permanent grassland (mainly perennial ryegrass, *Lolium perenne* L.), and 180,000 ha silage maize (*Zea mays* L.) as main crops, representing 82% of the cultivated area. The sandy regions are also important for collecting groundwater, as a source of drinking water for human consumption. Moreover, many valuable nature reserves are located in the sandy areas and recreation has become an important source of income. From the 1960's onwards, farms strongly intensified milk production per hectare by increasing inputs of fertilisers, concentrates and (irrigation) water. Current average milk production in sandy areas is 12,400 kg ha^{-1} yr^{-1}, 500 kg above the national average (Beldman & Prins, 1999).

This intensification has negatively affected environmental quality, through emissions of nitrogen (N) and phosphorus (P) and lowered groundwater levels. Farm nutrient outputs, in milk and meat, represent on average only 16 (N) and 27% (P) of inputs, mainly in purchased feeds and fertilisers (Aarts *et al.*, 1999b). As a consequence, nitrate concentrations in the upper groundwater of the sandy regions exceed the standard (50 mg l^{-1}) of the 1980 EU Drinking Water Quality Directive by a factor of up to five (Fraters *et al.*, 1998). As supply from extractable groundwater for human consumption became limiting, additional water from the rivers Rhine and Meuse has to be purified, at high costs.

To be sustainable, dairy farming systems must be acceptable to society. Therefore, in 1997 legislation was introduced, defining gradually decreasing maximum permitted surpluses of N and P for the period 1998-2008. In 1999 it was decided that the final norms should be realised in 2003. Calculated surpluses are based on the balance between farm nutrient inputs in feeds and fertilisers and outputs in milk, animals and manure. Hence, deposition and N fixation by leguminous crops are not included as inputs in this 'farm gate balance' approach of the MINeral Accounting System (MINAS; Van den Brand & Smit, 1998). Permitted surpluses for N are lowest for well-drained sandy soils, because of a supposedly low denitrification rate in the subsoil and their importance for the supply of drinking water. For these soils, the final maximum surplus is 60 kg N ha^{-1} yr^{-1} for silage maize, and 140 kg for grassland. For maize, undersown with Italian ryegrass to prevent nitrate leaching in the period from maize harvest until next spring, maximum surplus is 100 kg N ha^{-1} yr^{-1}. For intensive farms the acceptable surplus is increased by 15 kg N ha^{-1} yr^{-1}. P surplus

for all crops is limited to 9 kg $ha^{-1} yr^{-1}$. As current average surpluses are 340 kg $ha^{-1} yr^{-1}$ for N and 39 for P (Beldman & Prins, 1999), considerable reductions have to be realised. Moreover, it is expected that in the near future irrigation of crops will only be permitted to prevent death by drought, as reseeding grassland after a drought period may lead to excessive leaching of nitrate, as a result of mineralisation of the accumulated organic N in the upper soil layers (Whitehead, 1990).

Dairy farms can probably meet the environmental standards through reducing milk production per hectare, by expanding farm size, because input in fertilisers and feeds per hectare will decrease more than output in milk and cattle. However, agricultural land is very expensive and such developments therefore supposedly not economically sustainable. Moreover, a societal demand exists for alternative use of available land, such as expanding nature reserves. Export of manure, to increase farm output of nutrients, is also expensive, and may lead to off-site environmental problems. Improved resource management, resulting in reduced farm inputs of fertilisers, water and feed per kg milk, appears the most attractive option to realise both environmental and economic goals (Jarvis *et al.*, 1996). A considerable amount of information is available on the scope for reducing nutrient surpluses at a fixed level of milk production per hectare through improved management (Jarvis & Aarts, 2000; Kuipers & Mandersloot, 1999; Whitehead, 1995). However, the impact of improved management on attainable milk production per hectare at fixed nutrient surpluses, such as those defined in Dutch legislation, appears not to have been quantified. This paper describes a procedure to quantify such impact for well-drained sandy soils. A range of management options is presented, in the form of farming systems, in order of increasing complexity of management and efficiency in N utilisation. Maximum milk production for each of these systems is quantified, demonstrating the potential benefits of improving management.

A procedure to determine limits to milk production intensity

General description

Characteristic for dairy farming is the combination of plant and animal production in one system. Nutrients cycle through the system, by exchanging manure and forage between the plant and animal components. Mass and

nutrient flows can, to a certain extent, be controlled by management. The procedure to estimate maximum milk production intensity comprises six steps, describing plant and animal production and the associated mass and nutrient flows through the system (Figure 1). In the first step, maximum attainable net crop yields of the plant component of the system are quantified, as dictated by soil and crop characteristics, environmental restrictions and management decisions, such as intensity of grazing. In the next step, minimum feed requirements of the animal component are quantified on the basis of characteristics of the herd. Maximum crop yields and minimum feed requirements are combined in step 3, resulting in equations to calculate maximum milk production per hectare in an environmentally acceptable way on the basis of soil, crop and herd characteristics. A number of parameters in these equations can be affected by management. In step 4 a range of farming systems is formulated, in order of increasing complexity of management. The equations, derived in step 3, are used to estimate limits to milk production per hectare for each of the farming systems, for two levels of maximum permitted nutrient surpluses and four levels of water supplying capacity of the soil (step 5). As maximum permitted N surplus is considered the major environmental constraint for farming system intensity (Aarts *et al.*, 1999a), P-supply to the herd and P-surpluses of the farming systems are assessed ex post, as part of the check on the practical feasibility of the farming systems (step 6). Steps 4 to 6 are described in the section 'Application'.

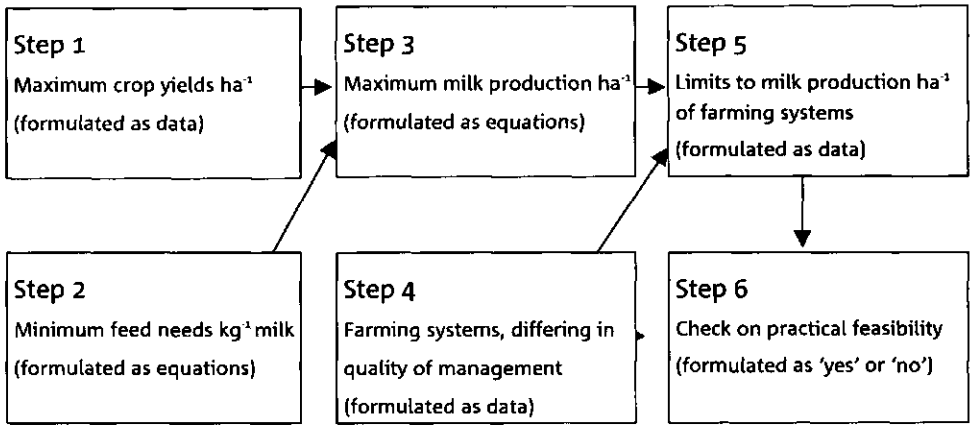

Figure 1. Successive steps in the procedure to determine limits to milk production per hectare of farming systems (⟶ flow of information)

Quantitative relations and data, used in the procedure, were derived from literature and experimental research and can easily be adapted. The procedure has been applied in the design of dairy farming systems for well-drained sandy soils with strict environmental goals. Since 1992, such a farming system, called 'De Marke', has been tested as a prototype at farm scale, providing an opportunity for validation and improvement of the procedure, including basic data and causal relations (Aarts *et al.*, 1999b; Aarts *et al.*, 1992).

Maximum crop yields, in dependence of soil and management characteristics and environmental restrictions (step 1)

On well-drained sandy soils in the Netherlands, availability of water is in general the major growth-limiting factor (Aarts *et al.*, 1999a). Uptake of carbon dioxide in the photosynthetic process takes place through the stomata, openings in the epidermis of the leaves, and concurrently water vapour diffuses to the outside air. When stomata close because of drought, to reduce transpiration, uptake of carbon dioxide also decreases. Hence, a proportional relation exists between water transpired and total dry matter produced (De Wit, 1958). Water consumption per unit harvestable dry matter in a given environment, is a plant species characteristic. It is influenced to a limited extent by fertilisation (Bürcky, 1993; Van der Schans & Stienezen, 1998), mainly as a result of a change in the partitioning of dry matter produced between harvestable and non-harvestable parts (roots and stubble). During the growing season in the Netherlands, average consumption amounts to 350 and 175 kg water per kg harvestable dry matter for grass and maize, respectively (Aarts *et al.*, 1999a). The low value for maize can be partly attributed to a more water-efficient photosynthetic mechanism (Van Keulen & Van Laar, 1986), and partly to a smaller proportion of dry matter invested in stubble and roots. Available water during the growing season is determined by rainfall and soil water supplying capacity (sum of soil water storage capacity in the rooted zone and maximum capillary rise during the growing season).
As a result of application of excessive doses of slurry in the past, the P status of most sandy soils is so high, that crops hardly respond to P fertilisation (Habekotté *et al.*, 1998), in contrast to N fertilisation. Grass under a cutting regime, generally takes up 85% of the mineral N present in the rooted layers of the soil, to a level of about 300 kg ha^{-1} (Middelkoop & Aarts, 1991; Prins, 1983). Beyond that level, the uptake fraction slowly decreases. Under grazing, mineral

N from urine and faeces also contributes to available N. As a relatively large proportion of that N is concentrated in 'hot spots', utilisation efficiency is low. The number of such spots can be reduced considerably by adapting the grazing regime, for instance from day-and-night grazing to daytime grazing only. Maize takes up about 75% of the available N to a level of 100 kg ha^{-1}, but beyond that level the uptake fraction sharply decreases. As N uptake ceases rather early in the growing season, only a small proportion of the N mineralised from late summer onwards, can be taken up. A catch crop, such as undersown Italian ryegrass, growing after maize harvest, can prevent leaching of excess mineral N until next spring (Schröder, 1998).

To estimate harvestable yields of grass and maize at limited availability of N and water, simple crop growth models have been developed (Aarts & Middelkoop, 1990; Middelkoop & Aarts, 1991). Yield reductions, associated with economically sub-optimal fertiliser application rates, that restrict nitrate concentrations in the upper groundwater to the standard of 50 mg l^{-1}, have been shown to depend on soil water supplying capacity, with the largest reductions on soils with the highest capacity. On average, dry matter yield of grass is reduced by 7% under daytime grazing, compared to 12% for day-and-night grazing (higher fertilisation levels permitted because of reduced quantities of N in urine patches). For maize, yield reduction is 17%, but only 4% when combined with a catch crop. Reductions in N-yield are about twice as high, because of reduced N contents in the dry matter at the lower fertiliser application rates.

Considerable losses of yields may occur during grazing, harvesting, conserving and feeding. For maize, losses of dry matter have been estimated at 11%, for grass 17% when cut, 20% when grazed day-and-night and 14% when grazed during daytime only. These assumptions are similar to generally accepted Dutch standards for 'good agricultural practice' (PR, 1997), but adapted slightly because of the specific characteristics of well-drained soils.

Final estimated net yields (harvestable yields minus sum of losses), presented in Table 1, correspond well with results of field experiments on sandy soils (Aarts *et al.*, 1999a) and with the results of 'De Marke'. On that farm, largely consisting of very dry soils and measured nitrate contents in the upper groundwater of 50 mg l^{-1}, net dry matter yield of grass (daytime grazing, cut twice and 75 mm irrigation) for the period 1992-1997 was 8,600 kg ha^{-1} on average, N yield 268 kg. Dry matter and N yield of maize (with Italian ryegrass as catch crop and 5 mm irrigation) was 9,600 and 120 kg ha^{-1}, respectively.

Table 1. Model-calculated average net yields for grass and maize, if nitrate content in the upper groundwater has to be restricted to 50 mg l^{-1} and irrigation is only allowed to prevent death by drought.

	Water-supplying capacity soil			
	25 mm (very dry)	75 mm (dry)	125 mm (rather humid)	175 mm (humid)
Dry matter (kg ha^{-1})				
Grass, cut for silage	8263	9077	9888	11119
Grass, day-and-night grazing, cut twice	7574	8159	8742	9432
Grass, day-and-night grazing, cut once	6989	7578	8122	8700
Grass, day-and-night grazing, no cut	6437	7003	7560	8053
Grass, day grazing, cut twice	7879	8573	9240	10039
Grass, day grazing, cut once	7552	8226	8888	9581
Grass, day grazing, no cut	7255	7940	8593	9230
Maize, without catch crop	8722	9701	10502	10680
Maize, with catch crop	9576	10965	12371	12709
N (kg ha^{-1})				
Grass, cut for silage	289	310	330	351
Grass, day-and-night grazing, cut twice	246	254	264	274
Grass, day-and-night grazing, cut once	221	235	244	253
Grass, day-and-night grazing, no cut	202	214	226	234
Grass, day grazing, cut twice	273	287	298	309
Grass, day grazing, cut once	259	274	286	297
Grass, day grazing, no cut	254	271	284	297
Maize, without catch crop	119	127	132	134
Maize, with catch crop	130	144	156	159
*Energy (kVEM ha^{-1})**				
Grass, cut for silage	7205	7915	8622	9695
Grass, day-and-night grazing, cut twice	6918	7510	8100	8799
Grass, day-and-night grazing, cut once	6701	7298	7849	8434
Grass, day-and-night grazing, no cut	6360	6919	7469	7956
Grass, day grazing, cut twice	7193	7862	8506	9277
Grass, day grazing, cut once	7167	7825	8472	9148
Grass, day grazing, no cut	7168	7845	8490	9119
Maize, without catch crop	8295	9226	9987	10157
Maize, with catch crop	9107	10428	11765	12086

* *1 kVEM = Dutch feeding standard for energy, comparable to 6.9 MJ Net Energy for Lactation*

Minimum feed requirements, in dependence of herd characteristics (step 2)

Simple equations have been formulated for energy, P and protein requirements at herd level. However, these equations can easily be sub-divided or otherwise detailed, if desired. Dairy cows require energy for maintenance, growth, pregnancy, physical activity and milk production. According to Dutch feeding standards (PR, 1997), annual energy requirements of a mature dairy cow with a (standard) weight of 600 kg are 2,013 kVEM (1 kVEM = 6.9 MJ Net Energy for Lactation; Van Es, 1978), plus 0.46 kVEM per kg milk produced (standardised at 3.32% protein and 4.00% fat). For pregnancy, 105 kVEM is needed annually. To rear a calf until its first lactation 3,975 kVEM is needed and during the first two lactations, an additional 329 kVEM is needed for body growth. Therefore, replacing a milking cow requires an 'investment' of 4,304 kVEM. The required number of calves to rear depends on the replacement rate of the cows, defined as the percentage of the number of milking cows annually sold. Hence, energy requirements per kg milk produced (Ereq) depend on milk production per cow and replacement rate, and can be approximated by equation 1, including the energy needs of both cows and calves.

$$Ereq = (2118+0.46*M+4304*R/100)/M \qquad (1)$$

with,

M: annual milk production per cow (kg, standardised at 3.32% protein and 4.00% fat)

R: annual replacement rate of cows (%)

Results at 'De Marke' indicate that the energy requirements of the herd, based on equation 1, are underestimated by approximately 5%. That is in agreement with the results of recent feeding experiments (Valk, 1999, Institute for Animal Science and Health, pers. comm.). This might be associated with higher maintenance requirements for the current, high yielding cows with higher body weights, since requirements were formulated some 15 years ago. To arrive at a more realistic estimate, the results of equation 1 are multiplied by 1.05.

Dietary requirements for P with safety margins to account for variation among individual animals, are estimated at 3.5 g kg^{-1} dry matter intake, or nearly 4.0 g P $kVEM^{-1}$ (Lynch & Caffrey, 1997; Van der Schans, 1998).

Protein-N in the diet of herd is converted into milk and body weight or excreted in urine and faeces. In Dutch dairy farming systems, the conversion efficiency from feed into milk and body weight is often only 16% (Aarts *et al.*, 2000). Theoretically, lactating cows might reach 43%, but under practical conditions that value is not attainable (Van Vuuren, 1994; Van Vuuren & Meijs, 1987; Whitehead, 1995), because of variation in N requirements among individual cows. Within the herd, the possibilities for individual feeding are limited. Hence, most animals consume more N than strictly needed, to prevent N deficiency of some individuals. Moreover, the N content of the ration may vary in the course of time, for instance because of grazing at daytime (high N content grass) and ingesting silage maize indoors at night (low N content). Cows can only partly buffer such fluctuations. Conversion of N into milk is more efficient than into body weight and young stock and non-lactating cows are also part of the herd. Consequently, a conversion efficiency of dietary N at farm level exceeding 25% will hardly be attainable under practical farming conditions, as indicated by results at 'De Marke' (Aarts *et al.*, 2000).

The required N-content in feed depends on the conversion efficiency of dietary N and the N-content of milk and body, i.e. 5.3 and 25.0 g kg^{-1}, respectively (Ketelaars & Van der Meer, 1999). Body weight production is a function of the replacement rate of the cows. Assuming (PR, 1997) that the weight of a mature cow is 600 kg, male calves (50%) are sold directly after birth at a weight of 40 kg, and surplus female calves (50% - replacement rate cows) at an average weight of 215 kg (50% directly after birth, 25% at one year of age and 25% at 22 months), N sales in milk and body weight can be calculated by equation 2. Subsequently, N requirement follows from total N sales and from N conversion efficiency from feed into milk and body weight (equation 3).

$$No = [5.3+(600*25*R/100+50/100*40*25+(50-R)/100*215*25)/M]/1000$$

$$No = (5.3+(96R+3188)/M)/1000 \quad (2)$$

$$Nreq = (5.3+(96R+3188)/M)/(10*Nut) \quad (3)$$

with,

No: sales of N per kg milk, including sales of body weight (kg)
Nreq: N requirements per kg milk (kg)
Nut: N conversion efficiency from feed into milk and body weight (%)

Maximum milk production intensity, in dependence of soil, crop and herd characteristics and environmental restrictions (step 3)

Total energy and N requirements of a dairy farm follow from the energy and N requirements per kg milk (equations 1 and 3, respectively) and total milk production. Part of the requirements is covered by net yields of home-grown grass and maize. Average net feed yields of a farm are dictated by soil moisture supplying capacity, share of the different crops in total farm area, whether or not maize is followed by a catch crop and the grazing system, and can be derived from the data presented in Table 1. The gap between feed requirements and net feed yields has to be filled by purchased feeds. In the Netherlands, a variety of commercial feeds is available. The ratio between N (kg) and energy (kVEM) in common commercial feeds varies from 0.010 - 0.072, with 0.026 for the concentrate most commonly used (PR, 1997). That permits an intensive farmer to optimise the diet of the herd.

$$Ei = Y*Ereq - Ep \quad (4)$$

$$Ni = Y*Nreq - Np \quad (5)$$

with,

Ei and Ni:	purchased energy and N, respectively (kVEM ha^{-1} and kg ha^{-1})
Y:	milk production of the farm (kg ha^{-1})
Ereq and Nreq:	energy and N requirements per kg milk, respectively (kVEM and kg)
Ep and Np:	net energy and N yields of the farm, respectively (kVEM ha^{-1} and kg ha^{-1})

The quantity of N in purchased fertilisers and feeds, minus the sales in milk and body weight, should not exceed the maximum permitted 'farm gate surplus', unless manure is exported.

$$Ni + Nfer - Y*No < Nsurplus \quad (6)$$

$$Ni < Y*No + Nsurplus - Nfer$$

with,

Nfer:	input of N in purchased fertilisers (kg ha^{-1})
Nsurplus:	maximum permitted 'farm gate N surplus' (kg ha^{-1})

Equations 5 and 6 can be combined:

$$Y < (Nsurplus - Nfer + Np)/(Nreq - No) \quad (7)$$

Input of N in purchased feed should not exceed output in sold products plus the permitted surplus, minus that in purchased fertilisers:

$$n*Ei < Y*No + Nsurplus - Nfer \quad (8)$$

with,

n: content of N in purchased feed (kg $kVEM^{-1}$)
Ei: purchased energy (kVEM ha^{-1})

Combining equations 4 and 8 yields:

$$Y < (Nsurplus - Nfer + n*Ep)/(n*Ereq - No) \quad (9)$$

Maximum milk production per ha, as dictated by energy and N requirements and maximum N surpluses, follows from either equation 7 or 9. In a comparable way, equations have been developed for maximum milk production intensity as a function of herd P requirements and permitted P surplus. However, on well-drained sandy soils the N-restrictions are in general most constraining. Whether equation 7 or equation 9 yields the lowest value, and the value itself, partly depends on factors beyond control of the farmer, such as maximum permitted 'farm gate N surplus' and soil moisture supplying capacity. However, also management decisions play a role, as they can influence parameters directly (the replacement rate of cows or the choice of purchased feed, for instance) or indirectly.
Manure management indirectly affects mineral fertiliser N requirements, as illustrated in a slightly simplified example. On a soil with a water supplying capacity of 75 mm, annual net N yield of grass (day grazing, cut twice) is 287 kg ha^{-1} (Table 1) and maximum permitted N surplus 140 kg ha^{-1}. Hence, maximum input in manure (volatilisation of ammonia included) and purchased mineral fertilisers is 287+140 = 427 kg N ha^{-1}. That implies that 287/427, i.e. 67% of the N, 'applied' in manure (excretion during grazing included) and mineral

fertilisers, has to be recovered in the long term (including re-use of N returned to the soil in grazing and harvesting losses or after temporary storage in stubble and roots). Such a utilisation efficiency can easily be realised, if only purchased mineral N is used. In that case, unfortunately, no milk production is possible, because manure cannot be applied. Because of high losses (mainly through ammonia volatilisation and denitrification), recovery from manure N will be below 67%, so some mineral N is needed to realise the average of 67%. Reducing losses from manure, for instance by 'low emission' housing or careful storage and application of manure, increases the recovery of N and reduces the need for mineral fertilisers. As a consequence, more manure can be applied, allowing higher milk production.

Effects of management decisions on the parameters of the equations can be determined by 'best professional judgement' or derived by modelling the effects of individual and combinations of measures. In general, farm management, aiming at maximising milk production per hectare in an environmentally acceptable way without exporting manure, should focus on minimising the use of purchased mineral fertilisers through improved utilisation of nitrogen from manure and on a reduced area of crops with relatively high fertiliser demands, like grass. Moreover, feed requirements should be minimised and the proportion of these requirements covered by home-grown crops maximised (to reduce the needs for purchased feeds).

Application

Farming systems, varying in quality of management (step 4)

In Table 2, a range of management options is presented in the form of farming systems, in order of increasing complexity of management and increasing utilisation efficiency of N. The purpose of this range is to examine to what extent quality of management does influence maximum possible milk production per hectare. Other systems could be designed, but they would fall somewhere within the range defined here. For ease of calculation, a computer-based programm, 'Irene 5', has been applied.

The last system in Table 2 (number 10) represents experimental farm 'De Marke', and requires high quality management (Aarts *et al.*, 1999a). A recent survey of the Dutch dairy farming sector has indicated the capability among

innovative Dutch farmers to manage their farms at this level (Oenema, 2000). Therefore, the formulated systems can be regarded practically feasible. System 1 resembles an 'average' present-day farming system, with minor adaptations to realise the environmental goals. Grazing is restricted to daytime, as practiced already on 50% of the farms, to increase the proportion of manure excretion indoors, and therefore reducing purchases of mineral fertiliser. Moreover, net grass yield is higher if grazing time is restricted, reducing purchases of feeds. Comparable to common practice, grass is cut twice and grazed three or four times, providing equal amounts of grass products in the diet during summer (fresh grass) and winter (grass silage). N-fertilisation levels are about 250 and 100 kg plant available N ha^{-1} for grass and maize, respectively, 40% below current practice. Levels increase slightly with water supplying capacity of the soil, because of increasing potential yield of N. In addition to cattle manure, grassland is fertilised with 200 kg purchased mineral N ha^{-1}, about 85 kg below the current level at commercial farms. In contrast with current practice, maize

Table 2. Characteristics of dairy farming systems on well-drained sandy soil, in order of increasing complexity of resource management to improve N utilisation efficiency. System 1 resembles a slightly modified present-day commercial system, system 10 represents experimental farming system 'De Marke'.

	Farming system									
	1	2	3	4	5	6	7	8	9	10
System characteristic										
Milk per cow* (kg yr^{-1})	7625	7625	7625	7625	8000	8000	8250	8250	8500	8773
Replacement cows (% yr^{-1})	47	40	35	30	30	30	30	30	30	28
Conversion dietary N (%)	17	18	19	20	20	21	21	22	23	24
Farm area in grassland (%)	80	80	75	70	70	70	65	65	60	55
Purchased mineral N on grass (kg ha^{-1})	200	175	175	175	150	150	125	125	125	125

* *fat (4.00%) and protein (3.32%) corrected; in the Netherlands about 6% above real production*

in system 1 is only fertilised with cattle manure, and Italian ryegrass is grown directly after maize harvest, as catch crop. The reduced fertilisation levels of the crops result in 10% lower N contents in the dry matter, which supposedly increases conversion of dietary N slightly from 16 to 17%. As in current practice, almost all female calves are reared for replacement, resulting in a replacement rate of 47% (most of the cows are sold already at an age of 4 years, after two lactation periods). In system 1, milk production per cow and the ratio between the areas of grass and maize are equal to current practice. Farmers should be able to manage system 1 without effort.

Going from system 1 to system 10, improved management increases N utilisation. The number of calves to be reared is reduced, because of a lower annual replacement rate of cows (from 47 to 28%), mainly as a result of improved health care and housing of the milking cows, increasing productive lifetime. Maize area increases, from 20 to 45%, to allow formulation of more balanced diets (ratio between energy and protein), resulting in improved conversion of dietary N up to 24%. Milk production per cow increases by 1,150 kg over the range of systems, mainly through genetic improvement and optimal health care and feeding. Daily grazing time, for instance, is split in two periods of 4 hours each, one in the morning and one in the evening. In the afternoon, cows stay indoors and are fed maize, to compensate for the high N uptake with grass. Moreover, this 'siesta-grazing system' (developed at 'De Marke') protects the cows from high mid-day temperatures outdoors, in summer. Overall fertilisation levels of grass and maize do not change from system 1 to 10. Nevertheless, input of purchased mineral N on grassland decreases from 200 to 125 kg ha^{-1}, as a result of improved recycling of N in animal manure and a reduction in grassland area. Ammonia volatilisation from urine and faeces is lower, as a result of 'low emission' housing of cattle (excrements are transported fast to a closed slurry storage). In addition, method and timing of manure application have been improved.

Maximum milk production intensity per hectare for each of the farming systems was calculated, for very dry soil (25 mm water supplying capacity), medium dry soil (75 mm), medium humid soil (125 mm) and humid soil (175 mm). Two levels of permitted maximum farm gate N surplus were considered: one equal to the realised surplus of experimental farm 'De Marke' (95 kg ha^{-1}), the other calculated according to the final standards from Dutch legislation (MINAS; 137-147 kg ha^{-1}, depending on farm area in grassland, as maximum surplus of grassland differs from that of maize).

Results and discussion (steps 5 and 6)

Maximum milk production intensities of the various farming systems clearly show the decisive impact of quality of management in dealing with environmental restrictions (Table 3). Improving management, from that in system 1 to that in system 10, roughly doubles attainable milk production per hectare. In poorly managed systems, maximum attainable milk production is so low, that such systems probably will not be sustainable from an economic point of view, considering the high costs of land per kg milk. For none of the systems, the calculated maximum was unrealistic in terms of the maximum permitted P surplus (9 kg ha^{-1}) or of the P requirement in the diet.

Water supplying capacity of the soil, influencing crop yields, has an impact of 1,200 - 1,700 kg ha^{-1}, rather low compared to the impact of management. That can be illustrated, using system 7 as an example, assuming a MINAS-surplus (141 kg N ha^{-1}). Crops on a 175 mm soil yield on average 2,939 kVEM and 34 kg N ha^{-1} higher than on a 25 mm soil (data from Table 1). To produce one kg of milk in system 7, 0.92 kVEM and 0.029 kg N is needed (results of equations 1 and 3; based on total feed requirements of the herd). Hence, an additional 1,172 kg milk ha^{-1} can be produced (34/0.029), increasing output in milk and body weight with 8.3 kg N ha^{-1}. This allows increased input in purchased feed. However, additional output can only partly be compensated by additional input of feed, because of losses from additional manure. Additional purchased feed will lead to higher milk production, increasing feed purchases again. Hence, finally milk production is 1,482 kg ha^{-1} higher for the humid soil. Because of higher N yields of the crops on a soil with a high water supplying capacity, fertilization requirements are higher too. These higher requirements can be met by the additional manure produced, and a slightly better performance of fertilizers on humid soils, so the mineral fertilizer requirement does not really change. For the additional milk production 1,263 kVEM is needed (0.92*1,482), while 2,939 kVEM is additionally available. Therefore, the farm can reduce inputs of energy in purchased feed, leading to an increase in the ratio between N (kg) and kVEM from 0.033 (25 mm) to 0.057 (175 mm).

There is no absolute guarantee that, under all conditions, realisation of the MINAS-surplus of 137 - 147 kg N ha^{-1} will indeed restrict the nitrate content in the upper groundwater to 50 mg l^{-1}. At 'De Marke', on soils very dry and sensitive to leaching, this target level is realised at a surplus of only 95 kg N ha^{-1} (Aarts *et al.*, 1999a). A reduction in the MINAS-surplus of on average 47 kg, to

Table 3. Maximum attainable milk production (t ha^{-1}, corrected to 4.00% fat and 3.32% protein) of farming systems, varying in management, water supplying capacity of the soil and maximum farm gate N-surplus. MINAS-surplus depends on the percentage grassland and varies between 147 (system 1) and 137 kg ha^{-1} (system 10); 95 kg ha^{-1} is the average surplus of experimental farm 'De Marke' (1993-1998).

Soil	Very dry (25 mm)		Dry (75 mm)		Medium humid (125 mm)		Humid (175 mm)	
Surplus	95 kg	MINAS	95 kg	MINAS	95 kg	MINAS	95 kg	MINAS
System								
1	5.8	7.5	6.1	7.8	6.7	8.3	7.0	8.7
2	7.1	8.9	7.3	9.1	7.9	9.8	8.3	10.1
3	7.7	9.6	8.0	9.9	8.6	10.6	9.0	10.9
4	8.3	10.3	8.6	10.6	9.4	11.3	9.7	11.7
5	9.1	11.1	9.4	11.4	10.2	12.1	10.5	12.5
6	9.7	11.8	10.0	12.1	10.8	12.9	11.1	13.3
7	10.5	12.5	10.8	12.8	11.6	13.6	11.9	14.0
8	11.1	13.2	11.5	13.6	12.3	14.4	12.7	14.8
9	11.7	13.9	12.2	14.4	13.0	15.2	13.4	15.6
10	12.5	14.7	12.9	15.2	13.8	16.0	14.2	16.4

a value similar to the actual surplus of 'De Marke', reduces maximum attainable milk production by 1,700 - 2,200 kg ha^{-1}. Nevertheless, levels of 12,500 - 14,200 kg ha^{-1} can be attained, i.e. almost equal to or above the current average on sandy soils. Fat and protein corrected milk production at 'De Marke' is 12,487 kg ha^{-1} (real milk production 11,890 kg ha^{-1}), which agrees well with the calculated results of system 10 on comparable soil.

Quality of management, as assumed in systems 9 and 10, seems feasible in the near future for well-educated and motivated farmers. Therefore, a milk production of nearly 15,000 kg ha^{-1}, substantially above the current average, should be attainable on most soils at the maximum farm gate N surpluses defined in Dutch legislation (MINAS).

For actual milk quota of the farm above the calculated maximum attainable level, additional measures are needed, which may require fundamental changes in the farming system. A possibility could be to rear young stock off-

farm. Rearing a calf until first lactation requires about 120 kg dietary N, used at an efficiency of less than 10%, as determined at 'De Marke' (Van der Schans, 1998). Disregarding the contribution of young stock, utilisation efficiency of dietary N at 'De Marke' would be 27%, instead of the actual 24%. Moreover, utilisation efficiency of N in the manure of young stock is low, because most is excreted during grazing (day-and-night). If, in farming system 10, young stock would be reared off-farm, maximum attainable milk production would increase considerably to 16,000 - 18,200 kg ha^{-1} (surplus 95 kg N ha^{-1}; water supplying capacity of the soil 25-175 mm) or 18,800 - 21,100 kg ha^{-1} (surplus according to MINAS). Economic analyses indicate low benefits of rearing young stock on intensive farms. Hence, rearing young stock might be more profitably on less intensive farms, for instance on clay or peat soils with higher permitted farm gate N surpluses. However, this practice increases the risk of spreading of animal diseases.

Further reducing grazing time (more urine and faeces collected indoors) and technical improvements in manure handling (creating different types of organic fertilisers) and application (lower losses by volatilisation of ammonia, improved spreading) can reduce the need for purchased mineral fertilisers considerably. Conversion efficiency of dietary N may be further increased through improved techniques to optimise rations, reducing the need for purchased dietary N. An example of such a technique, implemented at 'De Marke', is separate harvesting of cobs and stover of maize. Stover provides excellent fodder for non-lactating cows and young stock, cobs can replace purchased concentrates for high-yielding cows. If conversion of dietary N by cows could be increased from 27 (at 'De Marke') to 30% and the use of purchased mineral N on grassland reduced from 125 to 50 kg N ha^{-1}, maximum milk production could be 21,800 - 24,300 kg ha^{-1}, assuming off-farm rearing of young stock and a maximum surplus of 95 kg N ha^{-1}. Still higher milk production levels are only possible if manure is exported from the farm.

Conclusions and perspectives

The procedure presented in this paper appears useful in quantifying the effects of farm specific conditions and farm management on limits to milk production at exogenously defined maximum N surpluses. Data and quantitative relations can be adapted easily to reflect improved knowledge, as a result of research.

Results indicate that in sandy areas, with rather deep groundwater levels, milk production levels above the current average of 12,400 kg ha^{-1} are in principle technically attainable through improved resource management, even at a maximum farm gate surplus of 95 kg N ha^{-1}, 47 kg below the maximum defined in Dutch legislation. On the other hand, poor management will restrict milk production to levels far below current average. Water supplying capacity of the soil, influencing crop yields, has an impact of 1,200-1,700 kg ha^{-1}, rather low compared to the impact of management. Therefore, improving farmers' skills in efficient nutrient management should have high priority. Tools to identify the most suitable farming system, taking into account both economic and environmental goals, farm-specific conditions and farmer's skills, have to be further developed. Moreover, research has to focus on improved recycling of nutrients in urine and faeces, to reduce the need for purchased mineral N, and on increasing the conversion efficiency of dietary N into milk and body weight, to reduce the need for purchased feed N.

References

Aarts H.F.M., B. Habekotté & H. van Keulen, 2000.
Nitrogen (N) management in the 'De Marke' dairy farming system. Nutrient Cycling in Agroecosystems *(in press)*

Aarts, H.F.M., C. Grashoff & H. van Keulen, 1999a.
Managing dairy farming systems for groundwater conservation in the sandy regions of the Netherlands. Report 101. Institute for Agrobiological and Soil Fertility Research (AB-DLO), Wageningen, 22 pp.

Aarts, H.F.M., B. Habekotté, G.J. Hilhorst, G.J. Koskamp, F.C. van der Schans & C.K. de Vries, 1999b.
Efficient resource management in dairy farming on sandy soil. Netherlands Journal of Agricultural Science *47:153-167*

Aarts, H.F.M., E.E. Biewinga & H. van Keulen, 1992.
Dairy farming systems based on efficient nutrient management. Netherlands Journal of Agricultural Science *40: 285-299.*

Aarts, H.F.M.& N. Middelkoop, 1990.
Effects of soil characteristics and fertilisation on the yield of maize and on emissions of ammonia and nitrate. Report 131. Research Centre for Agrobiological Research (CABO), Wageningen, 55 pp. (in Dutch)

Beldman, A.C.G. & H. Prins, 1999.
Analysis of differences in mineral surpluses of specialised dairy farms (1996/1997). Report 2.99.01 Agricultural Economics Institute (LEI-DLO), Den Haag, 42 pp. (in Dutch)

Bürcky, K., 1993.
Einfluss des Stickstoffangebotes auf Wasserverbrauch and Stoffproduktion der Zuckerrübe in Gefassversuchen. Journal of Agronomy and Crop Science *171: 153 - 160.*

De Wit, C.T., 1958.
Transpiration and crop yields. Agricultural Reseach Reports 64.6, Pudoc, Wageningen, 88 pp.

Fraters, D., L.M.J. Boumans, G. van Drecht, T. de Haan & D.W. de Hoop, 1998.
Nitrogen monitoring in groundwater in the sandy regions of the Netherlands. In: K.W. van der Hoek, J.W Erisman, S. Smeulers, J.R Wisniewski & J. Wisniewski (Eds.), Proc. 1st International Nitrogen Conference, 479-485. Noordwijkerhout, The Netherlands.

Habekotté, B., H.F.M. Aarts, W.J. Corré, G.J. Hilhorst, H. van Keulen, J.J. Schröder, O.F. Schoumans & F.C van der Schans (eds.),1998. Sustainable dairy farming and phosphorus management. Report 92 Institute for Agrobiological and Soil Fertility Research (AB-DLO), Wageningen, 143 pp. (in Dutch)

Jarvis, S.C. & H.F.M.Aarts, 2000.
Nutrient management from a farming systems perspective. Grassland Science in Europe (accepted)

Jarvis, S.C., R.J. Wilkins & B.F. Pain, 1996.
Opportunities for reducing the environmental impact of dairy farming management: a system approach. Grass and Forage Science *51: 21-31.*

Ketelaars, J.J.M.H. & H.G. van der Meer, 1999.
Establishment of criteria for the assessment of the nitrogen content of animal manures. Final report of the second phase ERM project number 5765, European Commission, 47 pp.

Kuipers, A. & F. Mandersloot, 1999.
Reducing nutrient losses on dairy farms in The Netherlands. Livestock Production Science *61:139-144.*

Lynch, P.B. & P.J. Caffrey, 1997.
Phosphorus requirements for animal production. In: H. Tunney, O.T. Carton, P.C. Brookes & A.E. Johnston (eds.), Phosphorus loss from soil to water, 283-296. Cab International, Wallingford, UK.

Middelkoop N. & H.F.M. Aarts, 1991.
Effects of soil characteristics, fertilisation and utilisation on the yield of grass and on emissions of ammonia and nitrate. Report 144 Research Centre for Agrobiological Research (CABO), Wageningen, 78 pp. (in Dutch)

Oenema, J., 2000.
Nutrient cycling in Dutch dairy farming systems. Report Plant Research International, Wageningen (in prep.)

PR, 1997.
Handbook dairy farming. Research Station for Dairy farming, Lelystad, 519 pp. (in Dutch)

Prins, W.H., 1983.
Limits to nitrogen fertilizer on grassland. PhD Thesis, Wageningen Agricultural University, 122 pp.

Schröder, J. J., 1998.
Towards improved nitrogen management in silage maize production on sandy soils. PhD Thesis, Wageningen Agricultural University, 223 pp.

Van den Brandt, H.P. & H.P. Smit, 1998.
Mineral accounting: the way to combat eutrophication and to achieve the drinking water objective. Environmental Pollution *102: 705-709*

Van der Schans, D.A. & M.W.J. Stienezen, 1998.
Yields of grass and forage crops on soils with a low water supplying capacity. In: D.A. van der Schans (ed.), Forage production and drought, 21-33. Topics in Research, report 21, Research station for Arable Farming and Field Production of Vegetables PAV, Lelystad, The Netherlands (in Dutch).

Van der Schans, F.C., 1998.
P in animal feeding at De Marke. In: Habekotté, B., H.F.M. Aarts, W.J. Corré, G.J. Hilhorst, H. van Keulen, J.J. Schröder, O.F. Schoumans & F.C van der Schans (eds.), Sustainable dairy farming and phosphorus management, 101-126. Report 92 Institute for Agrobiological and Soil Fertility Research (AB-DLO), Wageningen (in Dutch)

Van Es, A.J.H., 1978.
Feed evaluation for ruminants. I. The system in use from May 1978 onwards in The Netherlands. Livestock Production Science *5: 331-345*

Van Keulen, H. & H.H. van Laar, 1986.
The relation between water use and crop production. In: H. van Keulen & J. Wolf (Eds.) Modelling of agricultural production: weather, soils and crops, 117-129. Simulation Monographs, Pudoc, Wageningen

Van Vuuren, A.M., 1994.
Digestion and nitrogen metabolism of grass fed dairy cows. Thesis Wageningen Agricultural University, 134 pp.

Van Vuuren, A.M. & J.A.C. Meijs, 1987.
Effects of herbage composition and supplement feeding on the excretion of nitrogen in dung and urine by grazing dairy cows. In: H.G. van der Meer, R.J. Unwin, T.A. van Dijk &

G.C. Ennik (Eds.), Animal manure on fodder crops, 17-24. Kluwer Academic Publishers, Dordrecht.

Whitehead, D.C., 1990.

Organic matter and nitrogen in the unharvested fractions of grass swards in relation to the potential for nitrate leaching after ploughing. Plant Soil *123: 39-49.*

Whitehead, D.C., 1995.

Grassland Nitrogen. Cab International, Wallingford, UK, 397 pp.

Men verzamelt gier 't best in een dichten, goed overdekten gierkelder. Het is wenschelijk de gier zoo snel mogelijk uit de grub naar den goed afgesloten kelder te vervoeren.

Pastoor H.W. Roes, 1908. Bemesting op zandgrond. Boerenbond Deurne

Discussion - Discussie

Discussion

The experimental farming system 'De Marke' plays a central role in the project. It is based on a transparent philosophy and on explicitly formulated assumptions with respect to the functioning of dairy farms. Not all aspects of the functioning of the experimental system can be addressed in this discussion. For detailed analyses of various aspects, the reader is referred to the preceding chapters of this thesis and to the 24 'De Marke' reports. As the main motive for initiation of the project was damage to the environment, resulting from inefficient N and P utilisation on dairy farms, this concluding chapter focuses on N and P flows in the experimental system. Has the system met expectations (how valid were the assumptions?) and to what extent does it differ from current practice? Results are only presented as a basis for discussion. Insofar as the objectives have not been fully realised, options for improvement of the system are discussed. After all, the 'De Marke' project still continues and a number of ecological goals must be realized at all costs. Next, the experience with the rather new research method 'prototyping' is discussed, and plans for the future are outlined. How can the knowledge already acquired be exploited and how can the 'De Marke' project anticipate on future demands for knowledge? Or, in short, how to proceed?

N and P flows of the 'De Marke' system

The principle underlying farm structure and farm management of 'De Marke' is that the purchase of feed and fertilisers can be substantially reduced by minimizing the requirements of both livestock (feed) and crops (fertiliser), and by meeting the remaining requirements as much as possible by fodder and manure produced on the farm. When less feed and fertilisers are purchased, less nutrients enter the farm. Thus, with output (in the form of milk and meat) remaining equal, the surpluses, and hence the losses, will decline.

Table 1. Inputs of N and P (kg ha^{-1}), as predicted (Aarts et al., *2000a,b) and as realised in the period 1994–1997 at 'De Marke', compared to those of a hypothetical commercial farm in the mid-nineties (Aarts* et al., *1999).*

	'De Marke' predicted	'De Marke' realised	Commercial farm
Fertilisers			
N	67	69	292
P	6.0	0.0	30.5
Feed			
N	41	96	145
P	5.9	13.9	22.5

In Table 1, inputs N and P realised at 'De Marke' in the financial years 1994/95 to 1997/98 are compared with both the prognoses and the values on a hypothetical commercial dairy farm of comparable intensity (12,000 kg ha^{-1} milk) on sandy soil, as derived from the literature (see the appendix to Chapter 6). As expected, a relatively large area of maize, lower fertiliser levels and a much more efficient utilisation of N and P from manure than under current practice, led to strongly reduce fertiliser requirements. Thanks to smaller animal numbers (a higher milk production and less young stock per cow), the feed requirement per kilogram of milk was lower than on commercial farms. The net energy yield of the crops appeared to be higher, thanks to the larger maize area (maize gives a higher energy yield than grass) and lower grazing and conservation losses. The combination of a lower feed requirement per kg milk and a higher net crop yield resulted in an external feed supply of 2,015 kg dry matter ha^{-1}, 42% of that on commercial farms. This also resulted in less N and P entering the farm with the feed, which though appreciably lower than on commercial farms, was still about twice as high as predicted. This was attributable in part to lower crop yields than expected, due to relatively dry growing seasons. Moreover, it proved to be difficult in practice to restrict the quantities of N and P in the rations to the minimum levels from a nutritional point of view ('feeding according to the norm'), in particular for young stock and dry cows. Feeding according to individual requirements was more difficult to achieve than expected, partly because animals form part of a herd. The

number of young stock, kept to replace cows, was 25% larger than expected, because some cows had to be replaced after they had slipped on the low-emission floor. The floor has been replaced in the meantime by a less slippery floor of similar emission characteristics. More young stock implies higher feed requirements and hence higher feed purchases. N uptake by the total herd (320 kg ha^{-1}) was 42 kg ha^{-1} (15%) higher than predicted, while P uptake (41.2 kg ha^{-1}) was 1.1 kg ha^{-1} (3%) higher.

The strongly reduced input of N and P in feeds and fertilisers has resulted in strong reductions in surpluses and losses (Table 2). For emission of ammonia and leaching of nitrate, the low levels aimed at were achieved, but emission of nitrous oxides still has to be further reduced. Also, N and P surpluses are still too high. Soil analyses suggest that annually, on average, 40 kg ha^{-1} of the N surplus does not contribute to environmental impact, because it accumulates in organic matter (Aarts *et al.*, 1999). Accumulation can be explained by the relatively dry summers (reduced mineralization) and the high C:N ratio in organic matter at the time the farm was started (Aarts *et al.*, 2000b).

Table 2. Main environmental results predicted (Aarts et al.*, 2000a,b), compared to those realised in the period 1994–1997 at 'De Marke' and at a hypothetical commercial dairy farm (Aarts* et al.*, 1999); the norm represents the objectives for the experimental farm 'De Marke'.*

	Norm	'De Marke' predicted	'De Marke' realised	Commercial farm
N surplus (kg ha^{-1})	128	122	153	407
Nitrate in groundwater (mg l^{-1})	50	50	47	132
Ammonia from manure (kg N ha^{-1})	30	18	21	64
Nitrous oxides (kg N ha^{-1})	3	3	5	9
P surplus (kg ha^{-1})	0.5*	0.0	2.5	39.3
P in groundwater (mg P l^{-1})	0.15		0.02	

* *The norm is based on the agricultural status of the soil 'adequate'. Because almost all plots still have a better status, the P surplus should be negative.*

It is expected that accumulation will soon end and that even temporarily depletion may be possible. Therefore, it is necessary to reduce the surplus to maintain nitrate levels in groundwater sufficiently low, also in the longer term. Moreover, the winters in the study period were rather wet, so more nitrate could leach without exceeding the norm for nitrate in groundwater (Hack-ten Broeke, 2000; Hack-ten Broeke *et al.*, 1999). A P surplus exceeding 0.5 kg ha^{-1} will eventually result in too much P in the groundwater. However, this may take a long time because large amounts of P can be fixed in the soil, especially in areas with a deep groundwater table, as on 'De Marke'. Thus, the results presented in Table 2 are promising, but do not guarantee continued realisation of all environmental goals under the current management regime. Improvements are therefore needed.

Improvements in the experimental system

The N surplus realised exceeds the norm by 25 kg ha^{-1} and the P surplus by at least 2.5 kg ha^{-1} (Table 2). The emission of ammonia from manure is 9 kg lower than the norm. Calculations of the permissible N surplus were based on the assumption that ammonia emission was equal to the norm. Hence, the N surplus should be reduced by 34 kg ha^{-1} rather than 25 kg ha^{-1}, to avoid excess nitrate leaching, unless a higher value for denitrification could be assumed than at the start of the project, for which there is no reason. Moreover, more denitrification would lead to increased production of nitrous oxides, for which the norm is exceeded already in the present situation (Velthof & Oenema, 1997). Also, the assumption of continuing accumulation in organic N in the soil (harmless 'loss') is unrealistic.

What adjustments could be made to reduce the surpluses to the levels considered necessary? Table 3 lists a number of obvious measures, including their indicative intensities.

This table illustrates the approach and serves as starting point for a thorough study on the most desirable adaptations of the system. The interactions between different measures should be considered, to arrive at a solid and sufficiently realistic total package. Results of analyses of the 'De Marke' system, presented in previous chapters of this thesis, can help to estimate effects of

Table 3. Measures for reducing nutrient surpluses of 'De Marke' to levels considered necessary.

Measure	Intended effect
Realisable on the short term (2 years):	
- reduction of young stock (−15%)	Less feed needed
- lower concentrations in rations (− 5%)	Lower input with purchased feed
- further reduction in grazing (− 25%)	More efficient utilisation of nutrients in manure
- a later start of manuring (2 weeks)	More efficient utilisation of nutrients in manure
- reduction in fertilisation (−18 kg N ha^{-1})	Restricting input of N into the soil
If not sufficient:	
- restriction of milk production per ha (−50 kg for each kg reduction in N surplus)	Less feed required
Conflicting with the project's objectives:	
- export of manure	Export of N and P
- rearing young stock off-farm	Less feed required

proposed measures. By restricting the number of young stock and reducing the N content of the rations, inputs of N and P through feed can be reduced. Raising a calf (up to 2 years of age) requires 120 kg N; less than 10% of this amount is deposited in the young animal. Reducing the number of young stock by 15% would reduce the number of calves by 0.15 per hectare and annual N intake by 9 kg ha^{-1} (to a value of 311 kg ha^{-1}). In that case, P intake would decrease by 1.2 kg ha^{-1} to 40.0 kg ha^{-1}. More judicious feeding could reduce N and P intake by 5% (for the whole herd, after the reduction in young stock) and thus reduce feed requirements to 295 kg N ha^{-1} and 38.0 kg P ha^{-1}. The combination of young stock reduction and more judicious feeding would result in a total reduction of 25 kg ha^{-1} N and 3.2 kg ha^{-1} P. The objectives with respect to the P surplus would then be realised, but the N surplus would still be too high. Thus, ways have to be found to reduce the input of fertiliser N from 69 to 60 kg ha^{-1}.

Reduction of the N input in purchased feed, by keeping less young stock and restricting N levels in the rations, will reduce the amount of N in manure by 10% (from 247 to 222 kg ha^{-1}). If fertiliser purchases are to be reduced without

the risk of lower crop yields (requiring higher N and P inputs in feed) the smaller quantity of manure must have a higher fertilisation value. Manure excreted during grazing (20% of total excretion) has a very low fertilisation value. As the production of N in manure on the farm will decline by 25 kg ha^{-1}, excretion of N during grazing will decrease by 5 kg ha^{-1}. By reducing grazing time by 25%, N excretion during grazing will further decrease by 11 kg ha^{-1}. Consequently, more N (i.e. 11 kg ha^{-1}) will be excreted indoors. However, thanks to the restricted N intake, total N excretion (188 kg ha^{-1}) will still be 9 kg ha^{-1} (5%) lower than before the adjustments in young stock numbers and rations.
Utilisation of N from manure can be improved by slightly delaying its application in spring (not before mid-March, instead of early in March). The more efficient utilisation of N from manure and the increased net mineralization in the soil as a result of the larger store of organic N, might make it possible to maintain crop yield at slurry and mineral fertiliser dressing levels both 9 kg N ha^{-1} below the average for 1994–1997.
Other effective measures that, however, in view of the objectives of 'De Marke' should be given no further attention, would be export of manure and rearing young stock off-farm. Export of manure would mean that mineral fertilisers would have to be purchased, albeit in smaller quantities because N from fertilisers has a higher fertilisation value than N from manure.
These calculations show that realizing the required reduction in N input is no sinecure. If it appears to be impossible to implement a sufficiently effective package of measures, it must be concluded that the milk production per hectare pursued is too high. A lower milk production will reduce inputs of N and P with purchased feed to a greater extent than outputs in milk and sold animals. The results of the system in 1994–1998 suggest that milk production would have to be reduced by 50 kg for each kilogram reduction in N surplus (Aarts *et al.*, 2000c). If no measures are taken, or if the measures taken prove to be completely ineffective, milk production should decline from 11,890 to 10,640 kg ha^{-1}, if the desired reduction in N surplus is to be realised.

Experience with the research methodology

At the start of the project, the research methodology applied ('prototyping') was relatively unknown and, possibly for that reason, rather controversial. The

most usual research methodology was to isolate elements from farming systems, to analyse these elements on technical functioning, to conduct comparative experimental studies if required, to model established relations and, finally, to explore the functioning of the farm system as a whole with a model. Too often there was no feedback from the model results to the actual farm system, i.e. from hypothesis to reality. In that approach there is a risk that interactions among farm elements do not come to the fore. Moreover, especially in 'Wageningen', the emphasis used to be on system analysis (the functioning of existing systems), while little attention was paid to synthesis (design). Although applied research had built up a tradition of farming systems research, it had a strong economic focus and was usually based on trial-and-error. In the method applied at 'De Marke', modelling is strongly linked to experimental research. Experimental testing and further development of a complete farming system that, in theory, can meet a number of predefined requirements, are characteristic of the method applied. The focus is continuously on the farm as a whole. Transparent standards are needed to be able to design systems that can meet the requirements and to explore whether experimental systems require improvement. As experimental farming systems are usually unique, if only because of their size, attempts to replicate them are futile. Besides, such an undertaking would be rather costly. For that reason, there are limited possibilities for statistically testing the results. In the 'prototyping' method, the functioning of an experimental system is explained on the basis of intensive, specific measurements, combined with a high value being attached to (structured) consultation with experts. On the basis of these results, the system is adapted and the whole process of measurements, consultations and modification is repeated. The consensus of experts (interpretation of results) substitutes, to some extent, the certainty researchers have traditionally derived from statistics. Until recently, this approach was revolutionary in agricultural science.

In the 'prototyping' method, models are considered tools for experts. Models offer the possibility of exploring directions and calculating the effects of alternatives, but are considered unsuitable for the generation of all ready systems. Models should be designed such that results can be readily explained: experts must be able to analyse the 'how' and 'why' of the figures. Following a model-based exploration of directions for development, a small team devises a farm design geared to the conditions and objectives. It is essential that all team members have sufficient knowledge of the dairy farming system as a whole,

but judge the farm on the basis of their own background (field of expertise and preferably also organisation, and hence, to some extent, also the objectives). In an experimental system, stringent standards and difficult conditions should preferably be selected. Such a choice furthers acceptance of the results ('if it works here, it will work anywhere') and readily brings bottlenecks to the fore. Communication with experts is necessary in order to utilise existing knowledge which, in combination with the sector and policy, helps create and maintain public support, as well as generating suggestions for improvement.

Thousands of visitors are welcomed at 'De Marke' every year, and presentations are given regularly throughout the country. It has become clear that the research methodology chosen has been effective in realisation of the integration of a variety of ideas from practice, research and policy. The prototype has functioned as a catalyst. Some results and ideas from the pilot farm have been adopted by practice (siesta grazing, splitting silage maize into stover for dry cows and cobs for highly productive cows, sowing Italian ryegrass combined with mechanical weeding of maize, conserving autumn grass with maize stover). Information is thus obtained from the performances of these practices on other farms.

'Prototyping' also has a clear shop-window effect. Research has to display its wares. Prospective buyers want to see the 'real thing' rather than deciding on the basis of information in the catalogue. In particular, in agriculture, by tradition, information transfer has a strong visual and personal orientation. This is illustrated, for example, by the importance attached in the past to demonstration projects such as fertilisation trials in practical situations (Roes, 1908). In the case of 'De Marke', an operational futurist farm system could be demonstrated at practical scale and observed in every aspect.

Experience has shown that the method also has its limitations. Its application is only useful if the system is sufficiently complex while, at the same time, insights are adequate in the basic principles affecting each element. Moreover, 'prototyping' is only meaningful if the system can function autonomously, which is usually only feasible at farm-scale. Functioning of a regional system probably cannot be quantified and explained sufficiently, because there are too many confounding factors and the system is too large. Besides, 'prototyping' can only be successful if it is supervised by a team with sufficient knowledge of common farming practice and the will and the skills to take decisions in mutual agreement.

The method is now being propagated and applied by research groups in the Netherlands, for example by Wageningen University (Bouma, 1999), and abroad in developing sustainable farming systems and in disseminating knowledge about them. Following a proposal of the Minister of Agriculture and the Minister of Environment, a comparable project has been initiated in arable farming and horticulture. The research into dairy farming has been expanded by 17 farms that have joined the project 'Cows & Opportunities' ('Koeien&Kansen'), which will be discussed below. Thus, the 'De Marke' project has apparently evolved from a project name into a product brand. In the USA, a project is being developed, designated 'De Marke Wisconsin'. This exemplifies the experience that 'De Marke' is often viewed, in particular abroad, as an approach to agriculture. This is also the case in Dutch policy circles, where the concept 'De Marke' is increasingly being used to identify farms with a positive attitude towards societal demands, such that they attempt to translate these demands into practice in a judicious, skillful and transparent manner.

How to proceed?

How can research into sustainable dairy farming best be shaped in the years to come? Research should be demand-driven and provide farms with knowledge that is applicable in farm development. The farmer must be given the oppertunity to anticipate technological, economic and societal developments. Since the start of the 'De Marke' project, the conditions for the dairy farming sector have changed. The obligation to comply with environmental standards is now beyond discussion, and a legislative framework enforcing this obligation is nearing completion (MINAS; Van den Brandt & Smit, 1998). Both the price of land and the cost of manure disposal have strongly increased, so extensive farming and manure export have become even more costly solutions for realising these environmental norms. Several farmers have shown already that environmental performance can be appreciably improved by adopting the strategy of 'De Marke' in farm management: improving N and P utilisation efficiency in and between each component of the farming system through judicious management. This is contrasted by the performance of the dairy farming sector as a whole, in which environmental performance has hardly improved between the mid-1980s and the mid-1990s. The N surplus of the reference commercial farm (with a comparable milk production ha^{-1}) decreased

from 486 to 407 kg ha^{-1}, but the P surplus increased from 33 to 39 kg ha^{-1}. Most dairy farmers have not even taken measures that would have led to increased revenues, such as accurately complying with fertiliser recommendations. In 1997, at least 50 kg ha^{-1} more N was applied on Dutch grasslands than recommended on economic grounds (Reijneveld *et al.*, 2000). Concurrently, the call from society for clean agriculture has become stronger, as reflected in the membership of nature conservation and ecological organisations, which has increased in 1999 by 150,000, reaching a total membership of 3.7 million. In 1999, the date for realisation of the most stringent MINAS loss norms has been advanced from early 2008 to early 2003. Moreover, additional restrictions will be imposed for the use of manure. As from 2000, the maize bonus (an allowance per hectare for maize cultivation) will be dependent on the environmental impact of the cultivation method applied.

As a result of these developments, low N and P utilisation efficiencies will soon become very expensive. By 2003, the N surplus on many dairy farms will have to be reduced by 50% or more to avoid high levies. Therefore, the demand for applicable technology for surplus reduction will greatly increase. Much knowledge has become available in recent years, not only from the 'De Marke' project but also from other research projects (PR, 1995), and is ready for use. The 'Cows & Opportunities' project was started in 1999 to serve the broad interests of the dairy farming sector. The project builds on experience gained at 'De Marke' and is actually an extrapolation of the 'prototyping' method. The 'Cows & Opportunities' project currently comprises 17 farms. In comparison to other projects, it stands out in terms of its transparent environmental standards, the binding agreements made with farmers and the intensive guidance given and research undertaken. The farming systems being developed for these farms have to comply with environmental standards that will come into force in some years time. Nevertheless, these requirements are far less stringent than those for 'De Marke': the N surplus for 'De Marke' should not exceed 128 kg ha^{-1} and no P surplus is allowed; in 'Cows & Opportunities', farms under comparable conditions are allowed to realise a N surplus of about 190 kg ha^{-1} and a P surplus of 9 kg ha^{-1}.

Farms and farmers are not just objects of research, but also research partners, contributing their experience, knowledge and vision. The project's dairy farmers play an important role in the dissemination of knowledge and advice. Each farm is representative of an important segment of the Dutch dairy farming sector (region, soil type, intensity) and is therefore identifiable for a particular

group of dairy farmers. The farm plans are transparent and well thought out, and farm performance is meticulously analysed and clearly presented. Experience with this group of farms should lead to formulation of a protocol for general use, to help individual dairy farmers in making their system sustainable.

Concurrently, the parent project 'De Marke' will continue to focus on the demand for knowledge in the more distant future. Improvements aimed at further reduction in surpluses, in particular the N surplus, will be implemented and 'De Marke' will anticipate future developments in the multifunctional use of land. Special attention is given to the integration of nature and landscape management, recreation and the 'production' of groundwater and energy on the dairy farm. 'De Marke' is, as it were, a step ahead of 'Cows & Opportunities' farms, where the knowledge acquired can be applied, once society has found ways to reasonably reward environmental achievements.

References

Aarts, H.F.M., B. Habekotté, G.J. Hilhorst, G.J. Koskamp, F.C. van der Schans & C.K de Vries, 1999.
Efficient resource management in dairy farming on sandy soil. Neth. J. Agric. Sci. *47: 153-167*

Aarts, H.F.M., B. Habekotté & H. van Keulen, 2000a.
Efficiency of phosphorus (P) management in dairy farming system 'De Marke'. Nutr. Cycl. Agroecosyst. *(in press)*

Aarts, H.F.M., B. Habekotté & H. van Keulen, 2000b.
Efficiency of nitrogen (N) management in dairy farming system 'De Marke'. Nutr. Cycl. Agroecosyst. *(in press)*

Aarts, H.F.M., B. Habekotté & H. van Keulen, 2000c.
Limits to intensity of milk production in sandy areas. Neth. J. Agric. Sci. *(in press)*

Bouma, J.,1999.
Ecologisering van de landbouw; van ideologische bevlogenheid naar implementatie. Spil *159-160: 31-35.*

Daatselaar C.H.G. & D.W. de Hoop, 1999.
'De Marke' en haar streefwaarde voor bedrijfseconomie; de vergelijking met de LEI-steekproefbedrijven op droge zandgrond. Rapport 2.99.07, LEI, Den Haag.

Hack-ten Broeke, M.J.D., 2000.
Nitrate leaching from dairy farming on sandy soils; case studies for experimental farm De Marke, Thesis, Wageningen University.

Hack-ten Broeke, M.J.D., A.G.T. Schut & J. Bouma, 1999.
Effects on nitrate leaching and yield potential of implementing newly developed sustainable land use systems for dairy farming on sandy soils in the Netherlands. Geoderma *91: 217-235.*

PR, 1995.
Toegepast onderzoek naar duurzame melkveehouderij. Proefstation voor de Rundveehouderij, Schapenhouderij en Paardenhouderij, Lelystad.

Reijneveld, J.A., H.F.M. Aarts, J. Oenema & B. Habekotté, 2000.
An analysis of N- surpluses of Dutch dairy farms. Nutr. Cycl. Agroecosyst. *(in prep.)*

Roes, H.W., 1908.
Bemesting op zandgrond. Boerenbond Deurne.

Van den Brandt, H.P. & H.P. Smit,1998.
Mineral accounting: the way to combat eutrophication and to achieve the drinking water objective. Environ. Pollut. *102: 705-709*

Velthof, G. L. & O. Oenema, 1997.
Nitrous oxide emission from dairy farming systems in the Netherlands. Neth. J. Agric. Sci. *45: 347-360.*

Discussie

Het experimentele systeem 'De Marke' speelt een centrale rol in het project. Het is gebaseerd op een heldere filosofie en opgetrokken uit veronderstelde wetmatigheden met betrekking tot het functioneren van een melkveebedrijf. Niet alle aspecten van het functioneren van het experimentele systeem kunnen in deze discussie aan de orde komen. Voor uitgebreide analyses op velerlei gebied wordt verwezen naar de voorgaande hoofdstukken en naar de 24 achterliggende 'De Marke'-rapporten. Omdat schade aan het milieu als gevolg van de gebrekkige N- en P-huishoudingen van het melkveebedrijf de directe aanleiding vormde voor het onderzoek, wordt in dit slothoofdstuk alleen, en slechts op hoofdlijnen, ingegaan op de N- en P-huishoudingen van het experimentele systeem. Heeft het systeem voldaan aan de verwachtingen (hoe deugdelijk zijn de veronderstellingen) en hoe sterk wijkt het af van de gangbare praktijk? Resultaten worden enkel gepresenteerd als basis voor discussie. Voor zover doelen niet volledig zijn gerealiseerd, wordt ingegaan op mogelijkheden om het systeem te verbeteren. Project 'De Marke' is immers nog niet aan het einde van haar bestaan en een aantal milieudoelen moet koste wat kost gerealiseerd worden. Vervolgens wordt de ervaring met de vrij onbekende onderzoeksmethode 'prototyping' besproken en wordt stilgestaan bij de plannen voor de toekomst. Hoe kan reeds verworven kennis worden benut en hoe kan project 'De Marke' inspelen op de vraag naar kennis in de toekomst? Kortom, hoe gaan we verder?

De N- en P-huishoudingen van systeem 'De Marke'

De filosofie achter de bedrijfsopzet en bedrijfsvoering van 'De Marke' is dat de aankoop van voer en meststoffen sterk kan worden verminderd door de behoeften van veestapel (voer) en gewassen (meststof) zo veel mogelijk te beperken en in de resterende behoeften zo veel mogelijk te voorzien met bedrijfseigen voer en mest. Als minder voer en meststoffen worden gekocht, komen ook minder N en P het bedrijf binnen. Als de afvoer, met melk en vee, gelijk blijft zullen de overschotten, en daarmee de verliezen, afnemen. In Tabel 1 is de aanvoer in de boekjaren 1994/1995 tot en met 1997/98 vergeleken met de vooraf berekende en met die van een fictief praktijkbedrijf op zandgrond

Tabel 1. De aanvoer van N en P (kg ha^{-1}) zoals verwacht (Aarts e.a., 2000a,b) en in de periode 1994-1997 gerealiseerd door 'De Marke' en het fictieve gangbare praktijkbedrijf (Aarts e.a., 1999).

	'De Marke' verwacht	'De Marke' gerealiseerd	Gangbaar bedrijf
Meststoffen:			
N	67	69	292
P	6,0	0,0	30,5
Voer:			
N	41	96	145
P	5,9	13,9	22,5

met een vergelijkbare intensiteit (ongeveer 12.000 kg melk ha^{-1}) en samengesteld op basis van literatuurgegevens (zie appendix Hoofdstuk 6).
Door een relatief groot aandeel maïs, bemestingsniveaus die aanzienlijk lager liggen dan in de praktijk en een veel betere benutting van N en P uit dierlijke mest, bleek de behoefte aan kunstmest, zoals verwacht, sterk te worden beperkt. Door het kleinere aantal dieren (hogere melkproductie en minder jongvee per koe) is de voederbehoefte per kg melk lager dan op gangbare bedrijven. De netto energieopbrengst van de gewassen bleek daarentegen hoger door het hogere aandeel maïs (hogere opbrengsten dan gras) en geringere beweidings- en conserveringsverliezen. Door de combinatie van lagere voederbehoeften per kg melk en een hogere netto gewasproductie is de aanvoer van voer van buiten het bedrijf met 2.015 kg drogestof ha^{-1} 58% lager dan gangbaar. Dat wordt redelijk weerspiegeld in de aanvoer van N en P met dat voer. De aanvoer daarvan was weliswaar veel lager dan op het gangbare referentiebedrijf, maar desondanks ongeveer twee keer zo hoog als vooraf verondersteld. Dat werd ten dele veroorzaakt door lagere gewasopbrengsten, als gevolg van relatief droge groeiseizoenen. In de praktijk bleek het bovendien te moeilijk de hoeveelheden N en P in het rantsoen te beperken tot het niveau dat minimaal nodig is uit voedingsoogpunt (het 'op de norm voeren'), met name bij jongvee en droogstaand melkvee. Een belangrijke reden is dat de dieren in groepen leven en voeren naar individuele behoeften moeilijker bleek dan vooraf verondersteld. Het aantal stuks jongvee dat aangehouden werd om

koeien te vervangen was 25% groter dan verwacht, ondermeer omdat koeien vervroegd moesten worden afgevoerd nadat ze op de emissie-arme, maar gladde, vloer waren uitgegleden. De vloer is intussen vervangen door een minder gladde met vergelijkbare milieuprestaties. Meer jongvee betekent een grotere voederbehoefte en dus meer aankoop. De N-opname van de veestapel als geheel (320 kg ha^{-1}) was 42 kg ha^{-1} (15%) hoger dan vooraf berekend. De P-opname (41,2 kg ha^{-1}) was 3% (1,1 kg) hoger.
Zoals uit Tabel 2 blijkt, heeft de sterk beperkte aanvoer van N en P in meststoffen en voer geleid tot sterk afgenomen overschotten en verliezen. De ammoniakvervluchtiging en de nitraatuitspoeling bereikten daardoor de gewenste lage waarden maar het verlies van stikstofoxiden moet verder worden beperkt. Ook de overschotten van N en P zijn nog te hoog. De resultaten van bodemanalyses suggereren dat gemiddeld jaarlijks per ha 40 kg van het N-overschot in de bodem 'onschadelijk' wordt vastgelegd in organische stof (Aarts *e.a.*, 1999). Ophoping is verklaarbaar vanuit de relatief droge zomers (weinig mineralisatie) en de ruime verhouding tussen C en N in de organische stof bij de start van het bedrijf (Aarts *e.a.*, 2000b).

Tabel 2. Belangrijkste milieuprestaties zoals verwacht (Aarts e.a., *2000a,b) en in de periode 1994-1997 gerealiseerd op 'De Marke' en het fictieve gangbare referentiebedrijf (Aarts* e.a., *1999); de norm is de maximale waarde die de doelstelling van het proefbedrijf toestaat.*

	Norm	'De Marke' verwacht	'De Marke' gerealiseerd	Gangbaar bedrijf
N-overschot (kg ha^{-1})	128	122	153	407
Nitraat grondwater (mg l^{-1})	50	50	47	132
Ammoniak uit mest (kg N ha^{-1})	30	18	21	64
Stikstofoxiden (kg N ha^{-1})	3	3	5	9
P-overschot (kg ha^{-1})	0,5*	0,0	2,5	39,3
P grondwater (mg P l^{-1})	0,15		0,02	

* *de norm is gebaseerd op landbouwkundige toestand 'voldoende'. Omdat vrijwel alle percelen nog steeds een hogere toestand hebben zou het P- overschot negatief moeten zijn.*

Naar verwachting zal de ophoping spoedig eindigen en er kan tijdelijk zelfs netto mineralisatie plaatsvinden. Het is dus nodig het overschot te verlagen om ook op langere termijn het nitraatgehalte van het grondwater voldoende laag te kunnen houden. Bovendien waren de winters in de hier gerapporteerde periode vrij nat, waardoor meer nitraat kon uitspoelen zonder de norm voor nitraatconcentratie in het grondwater te overschrijden (Hack-ten Broeke, 2000; Hack-ten Broeke *e.a.*, 1999).
Een overschot van meer dan 0,5 kg P zal uiteindelijk tot een te hoog P-gehalte in het grondwater leiden, al kan het zeer lang duren voordat dit gebeurt, omdat bij diepe grondwaterstanden als op 'De Marke' zeer veel P in de bodem kan worden vastgelegd. De resultaten in Tabel 2 zijn dus hoopgevend, maar bieden beslist geen zekerheid dat alle milieunormen bij continuering van de huidige bedrijfsvoering blijvend gerealiseerd zullen worden. Verbeteringen zijn daarom nodig.

Verbeteringen experimenteel systeem

Het gerealiseerde N-overschot is 25 kg ha^{-1} hoger dan de norm toelaat, het P-overschot minstens 2,5 kg (Tabel 2). De vervluchtiging van N als ammoniak uit mest is 9 kg lager dan de norm. Bij de berekening van het toelaatbare N-overschot is uitgegaan van een ammoniakemissie gelijk aan de norm. Daarom moet het overschot niet met 25 kg N ha^{-1}, maar met 34 kg afnemen om de bodem niet te zwaar te belasten, tenzij denitrificatie nu zwaarder kan worden ingeschat dan bij aanvang van het project. Daar zijn geen redenen voor. Meer denitrificatie zou bovendien leiden tot een toename van de produktie van stikstofoxiden, waarvan de norm nu al wordt overschreden (Velthof & Oenema, 1997). Ook het veronderstellen van doorgaande accumulatie als organisch-N in de bodem (onschadelijk 'verlies') is niet reëel.
Welke aanpassingen kunnen worden doorgevoerd om de overschotten te verlagen tot de noodzakelijk geachte niveaus? In Tabel 3 wordt een aantal voor de hand liggende maatregelen genoemd met daarbij indicatieve intensiteiten. Deze tabel is bedoeld als eerste aanzet voor een gedegen studie naar de meest gewenste bijstelling van het systeem en illustreert de benadering, de denklijn. Andere maatregelen of intensiteiten zijn mogelijk. Met name de interacties tussen maatregelen moeten in beschouwing worden genomen om te komen tot een gedegen totaalpakket met voldoende realiteitswaarde. De effecten van

10.640 kg ha^{-1} om de noodzakelijke afname van het N-overschot alsnog te realiseren.

Ervaringen met de onderzoeksmethode

Bij de start van het project was de gebruikte onderzoeksmethode, 'prototyping', onbekend en mogelijk mede daardoor vrij omstreden. Het was gebruikelijk om onderdelen uit bedrijfssystemen te isoleren, te analyseren op technisch functioneren, eventueel vergelijkend experimenteel te onderzoeken, gevonden wetmatigheden in modellen te vatten en het functioneren van bedrijfssystemen als geheel vervolgens modelmatig te verkennen. Zonder terugkoppeling van de realiteit van het hele bedrijfssysteem naar model, van werkelijkheid naar hypothese. Daardoor zullen interacties tussen elementen van het bedrijf vaak buiten beeld blijven. Bovendien lag, zeker in Wageningen, de nadruk op de analyse van systemen (hoe werken bestaande systemen), aan synthese (ontwerpen) werd nauwelijks aandacht besteed. Het praktijkonderzoek had wel een traditie op het gebied van onderzoek naar bedrijfssystemen, maar dat onderzoek was sterk economisch gericht en veelal gebaseerd op 'trial and error'. In de methode die in het project 'De Marke' wordt toegepast is modelmatig en experimenteel onderzoek sterk verweven. Het experimenteel toetsen en verder ontwikkelen van een compleet bedrijfssysteem, dat in theorie kan voldoen aan een aantal van te voren gedefinieerde eisen, is een kenmerkend onderdeel van de methode. Het bedrijf als geheel staat steeds centraal. Heldere normen zijn nodig om systemen te kunnen ontwerpen die in theorie voldoen aan die eisen en om na te kunnen gaan of experimentele systemen moeten worden verbeterd. Omdat experimentele bedrijfssystemen in de regel uniek zijn, vooral door hun omvang, is een poging ze in veelvoud aan te leggen weinig zinvol. Bovendien is dat zeer kostbaar. Traditionele statistische bewerkingen van resultaten zijn daardoor maar beperkt mogelijk. Bij de methode 'prototyping' wordt het functioneren van een experimenteel systeem daarom verklaard vanuit intensief, gericht meten en door veel waarde toe te kennen aan het resultaat van (gestructureerd) deskundigenoverleg. Op basis daarvan wordt het systeem bijgesteld waarna het proces van meten, overleg en aanpassen zich herhaalt. De breed gedragen mening van deskundigen (interpretatie resultaten) vervangt

als het ware een stuk zekerheid die de statistiek de onderzoeker traditioneel biedt. Dat was tot voor kort revolutionair in wetenschappelijke kringen.
Modellen worden bij 'prototyping' gezien als gereedschap voor deskundigen. Ze bieden de mogelijkheid om richtingen te verkennen en alternatieven snel door te rekenen, maar worden niet in staat geacht om klant-en-klare systemen te genereren. Modellen moeten zodanig zijn opgezet dat uitkomsten eenvoudig verklaard kunnen worden, de deskundige moet achter het hoe en waarom van cijfers kunnen kijken. Na het modelmatig verkennen van ontwikkelingsrichtingen, bedenkt een klein team een op de omstandigheden en doelen toegesneden bedrijfsopzet. Belangrijk daarbij is, dat elk van de teamleden voldoende kennis bezit van het melkveebedrijf als geheel, maar het bedrijf vanuit een eigen achtergrond (kennisveld en bij voorkeur ook organisatie, en daarmee in zekere mate doelstelling) benadert. Bij een experimenteel systeem moet bij voorkeur worden gekozen voor scherpe normen en moeilijke omstandigheden. Dat bevordert acceptatie van resultaten ('als het hier lukt, kan het overal') en brengt knelpunten snel voor het voetlicht.
In de methode neemt communicatie een belangrijke plaats in. Communicatie met deskundigen is nodig om bestaande vakkennis te kunnen benutten, met praktijk en beleid om draagvlak te creëren en te handhaven en suggesties voor verbetering te genereren. Jaarlijks bezoeken duizenden mensen 'De Marke', wekelijks worden ook elders lezingen verzorgd. Duidelijk is geworden dat de gekozen onderzoeksmethode ertoe heeft geleid dat allerlei ideeën vanuit praktijk, onderzoek en beleid konden worden opgepikt. Het prototype functioneerde als katalysator. Een aantal vindingen van het proefbedrijf is door de praktijk overgenomen (siëstabeweiding; splitsen van snijmaïs in stro voor droogstaande koeien en korrels voor hoog productieve dieren; zaaien van Italiaans raaigras in combinatie met schoffelen maïs; het inkuilen van najaarsgras op maïssto), zodat ook informatie wordt verkregen over het functioneren ervan op andere bedrijven.
'Prototyping' heeft duidelijk een etalage-effect. Ook onderzoek moet laten zien wat er 'te koop' is. Aspirant-kopers willen een artikel in het echt zien, niet alleen beslissen op basis van de informatie in de catalogus. Met name in de landbouw is de informatieoverdracht traditioneel sterk visueel en persoonlijk gericht. Dat blijkt ook uit het belang dat in het verleden werd toegekend aan demonstratieprojecten, waaronder bemestingsproeven in praktijksituaties (Roes, 1908). In het geval van 'De Marke' kan een werkend futuristisch

bedrijfssysteem op praktijkschaal worden getoond en in al zijn onderdelen bekeken.
De ervaring leert dat de methode ook beperkingen kent. Toepassing is alleen zinvol als het systeem voldoende complex is, terwijl er tegelijkertijd voldoende bekend is over de wetmatigheden binnen onderdelen. Bovendien is prototyping alleen zinnig als het systeem zelfstandig kan functioneren. Dat is in de regel alleen op bedrijfsniveau. Het functioneren van een regionaal systeem kan waarschijnlijk onvoldoende worden gekwantificeerd en verklaard, omdat er teveel storende elementen zijn en het systeem te groot is. Prototypering kan bovendien alleen maar slagen als een team beschikbaar is met voldoende kennis van praktijksituaties en de wil en kunde om in overleg tot beslissingen te komen.
De methode wordt intussen door het onderzoek in binnen- en buitenland gepropagandeerd en toegepast om duurzame bedrijfssystemen te ontwikkelen en kennis uit te dragen, ondermeer door Wageningen Universiteit (Bouma, 1999). Op voorstel van de ministers van Landbouw, Natuurbeheer en Visserij (LNV) en van Volksgezondheid, Ruimtelijke Ordening en Milieu (VROM) is een vergelijkbaar project gestart in de akker- en tuinbouw. Het onderzoek in de melkveehouderij is uitgebreid met 17 praktijkbedrijven in het project 'Koeien&Kansen', wat verderop besproken wordt. Aardig is te constateren dat 'De Marke' van projectnaam naar productnaam evolueert. In de Verenigde Staten wordt een project opgezet dat 'De Marke Wisconsin' als werktitel draagt. Dat voedt de ervaring dat met name mensen uit het buitenland 'De Marke' vaak opvatten als een benadering van landbouw. Die ervaring geldt ook de overheid. In 'Den Haag' wordt steeds vaker over 'De Marke'-bedrijven gesproken als het gaat over bedrijven die de wensen van de samenleving positief benaderen en ze op een weloverwogen, vakbekwame en open wijze proberen te vertalen naar bedrijfsvoering.

Hoe verder?

Hoe kan het onderzoek naar duurzame melkveehouderij de komende jaren het best vorm worden gegeven? Onderzoek moet dienend zijn, het hoort bedrijven kennis te leveren die bruikbaar is bij de bedrijfsontwikkeling. De ondernemer moet in kunnen spelen op technische, economische en maatschappelijke ontwikkelingen. Sinds de start van project 'De Marke' zijn de omstandigheden

voor de melkveehouderij veranderd, deels onder invloed van het project zelf. Het moeten gaan voldoen aan milieunormen is geen punt van discussie meer, een wettelijk kader waarmee dat zal worden afgedwongen staat klaar (MINAS; Van den Brandt & Smit, 1998). Grondprijzen en de kosten van mestafzet zijn sterk toegenomen, waardoor extensiveren of afvoeren van mest nog kostbaardere oplossingen zijn geworden om aan de milieunormen te kunnen voldoen. Een aantal bedrijven heeft al laten zien dat milieuprestaties aanzienlijk kunnen woren verbeterd door bij de bedrijfsvoering de strategie van 'De Marke' toe te passen: het verbeteren van de benutting van N en P in elke schakel van het bedrijf door zorgvuldig management. In contrast daarmee staan de prestaties van de melkveehouderij als geheel: de milieuprestaties zijn tussen het midden van de jaren tachtig en negentig weinig verbeterd. Het N-overschot van het referentiebedrijf van 'De Marke' daalde weliswaar van 486 naar 407 kg ha^{-1} maar tegelijkertijd steeg het P-overschot van 32 tot 39 kg. Zelfs maatregelen waarmee het inkomen zou kunnen worden verbeterd, zoals het secuur opvolgen van het bemestingsadvies, zijn door de meeste bedrijven nog niet genomen. In 1997 werd het Nederlandse grasland gemiddeld met zeker 50 kg N ha^{-1} meer be(kunst)mest dan op economische gronden wordt geadviseerd (Reijneveld *e.a.*, 2000). De roep van de samenleving om schone vormen van landbouw is daarentegen sterk toegenomen, zoals ondermeer blijkt uit de sterke toename van het aantal mensen dat lid is van een natuur- of milieuorganisatie. In 1999 steeg dat aantal met 150.000 tot 3,7 miljoen. De ingangsdatum voor de meest strenge MINAS-verliesnormen is in 1999 teruggebracht van begin 2008 tot begin 2003 en er zullen extra beperkingen worden gesteld aan het gebruik van dierlijke mest. De hoogte van de maïspremie (een hectaretoeslag voor de teelt van maïs) is met ingang van 2000 afhankelijk gesteld van de milieubelasting van de toegepaste teeltmethode.
Door deze ontwikkelingen wordt verspilling van N en P al binnenkort zeer kostbaar. In 2003 zal het N-overschot van veel melkveebedrijven minstens gehalveerd moeten zijn om hoge boetes te ontlopen. De vraag naar toepasbare kennis, om het overschot terug te kunnen dringen, zal dan ook sterk toenemen. Veel kennis is de laatste jaren beschikbaar gekomen, niet alleen uit project 'De Marke' maar ook uit andere onderzoekprojecten (PR, 1995) en ligt als het ware op de plank te wachten op gebruik. Om de brede praktijk te kunnen bedienen, is in 1999 een project gestart, het al eerder genoemde 'Koeien&Kansen'. Het project bouwt voor op de ervaringen van 'De Marke', en is in feite de extrapolatiestap van de methode prototyping. Zeventien praktijkbedrijven

vormen het hart van dit project. In vergelijking tot andere projecten onderscheidt dit project zich door heldere milieunormen, duurzaamheid over de volle breedte, bindende afspraken met de veehouders en intensieve begeleiding en onderzoek. De bedrijfssystemen die voor deze bedrijven worden ontwikkeld, moeten voldoen aan de milieueisen die in 2003 gaan gelden. Die eisen zijn veel minder vergaand dan die voor 'De Marke'. Het N-overschot op 'De Marke' mag 128 kg N ha^{-1} bedragen en er mag geen P-overschot zijn. Onder vergelijkbare omstandigheden mag het N-overschot op de 'Koeien&Kansen'-bedrijven ongeveer 190 kg N ha^{-1} bedragen, het P-overschot 9 kg ha^{-1} (= 20 kg fosfaat).
Bedrijven en hun management zijn niet alleen object van onderzoek maar ook onderzoekspartner, met inbreng van ervaring, kennis en visie. De veehouders krijgen een belangrijke functie op het gebied van kennisoverdracht en voorlichting. Elk bedrijf is representatief voor een belangrijk segment van de melkveehouderij in Nederland (regio, grondsoort, intensiteit) en is daardoor herkenbaar voor een groep melkveehouders, de bedrijfsplannen zijn inzichtelijk en goed onderbouwd en de bedrijfsprestaties worden nauwkeurig geanalyseerd en helder gepresenteerd. Ervaringen met de groep bedrijven moeten leiden tot een beschrijving van een algemeen bruikbaar protocol, waarmee individuele melkveebedrijven hun systeem kunnen 'verduurzamen'.
Het moederproject 'De Marke' zal zich intussen blijven richten op de kennisbehoefte in de wat verdere toekomst. Verbeteringen om het overschot van met name N verder terug te dringen zullen worden doorgevoerd en er zal ingespeeld worden op toekomstig multifunctioneel grondgebruik. Het gaat daarbij vooral om de integratie van natuur- en landschapsbeheer, recreatie en de 'produktie' van grondwater en energie op het melkveebedrijf. 'De Marke' loopt als het ware een fase voor op de 'Koeien&Kansen'-bedrijven, waar de opgedane kennis kan worden toegepast, nadat de maatschappij wegen heeft gevonden om prestaties op dat gebied naar redelijkheid te belonen.

Literatuur

Aarts, H.F.M., B. Habekotté & H. Van Keulen, 2000a.
Efficiency of phosphorus (P) management in dairy farming system 'De Marke'. Nutr. Cycl. Agroecosyst. *(in press).*

Aarts, H.F.M., B. Habekotté & H. Van Keulen, 2000b.
Efficiency of nitrogen (N) management in dairy farming system 'De Marke'. Nutr. Cycl. Agroecosyst. *(in press).*

Aarts, H.F.M., B. Habekotté & H. Van Keulen, 2000c.
Limits to intensity of milk production in sandy areas. Neth. J. Agric. Sci. *(in press).*

Aarts, H.F.M., B. Habekotté, G.J. Hilhorst, G.J. Koskamp, F.C. Van der Schans & C.K de Vries, 1999.
Efficient resource management in dairy farming on sandy soil. Neth. J. Agric. Sci. *47: 153-167.*

Bouma, J., 1999.
Ecologisering van de landbouw; van ideologische bevlogenheid naar implementatie. Spil *159-160: 31-35.*

Daatselaar C.H.G. & D.W. De Hoop, 1999.
'De Marke' en haar streefwaarde voor bedrijfseconomie; de vergelijking met de LEI-steekproefbedrijven op droge zandgrond. Rapport 2.99.07, LEI, Den Haag.

Hack-ten Broeke, M.J.D., 2000.
Nitrate leaching from dairy farming on sandy soils; case studies for experimental farm De Marke. Thesis, Wageningen University.

Hack-ten Broeke, M.J.D., A.G.T. Schut & J. Bouma, 1999.
Effects on nitrate leaching and yield potential of implementing newly developed sustainable land use systems for dairy farming on sandy soils in the Netherlands. Geoderma *91: 217-235.*

PR, 1995.
Toegepast onderzoek naar duurzame melkveehouderij. Proefstation voor de Rundveehouderij, Schapenhouderij en Paardenhouderij, Lelystad.

Reijneveld, J.A., H.F.M. Aarts, J. Oenema & B. Habekotté, 2000.
An analysis of N- surpluses of Dutch dairy farms. Nutr. Cycl. Agroecosyst. *(in prep.)*

Roes, H.W., 1908.
Bemesting op zandgrond. Boerenbond Deurne.

Van den Brandt, H.P. & H.P. Smit, 1998.
Mineral accounting: the way to combat eutrophication and to achieve the drinking water objective. Environ. Pollut. *102: 705-709.*

Velthof, G. L. & O. Oenema, 1997.
Nitrous oxide emission from dairy farming systems in the Netherlands. Neth. J. Agric. Sci. *45: 347-360.*

Het zijn niet uw beste vrienden, die om den borrel U bezoeken.

Pastoor H.W. Roes, 1908. Bemesting op zandgrond. Boerenbond Deurne

Summary - Samenvatting

Nederlandse samenvatting: Milieu (in druk)

Summary

Resource management in a 'De Marke' dairy farming system

This thesis is a result of twelve-and-a-half year's research into the possibilities of dairy farming being able to meet societal demands, in particular with regard to its impact on the environment. In the sandy regions of the eastern, central and southern parts of the Netherlands, environmental quality is strongly affected by dairy farming. Rates of fertiliser application are high and sprinkler irrigation systems are used on a large scale. In the mid-1980s, it was established that only 14% of the nitrogen (N) that entered farming systems (in the form of feed, manure or atmospheric deposition) on sandy soils, actually left those systems in the form of milk or animals. The remaining 486 kg ha^{-1} entered the environment, through, for example, ammonia emission or leaching into the groundwater as nitrate. Moreover, only 33% of the phosphorus (P) supplied was actually used. The remainder (33 kg ha^{-1}) accumulated in the soil or was leached following saturation. The marked increase in groundwater extraction for sprinkler irrigation resulted in damage to nature reserves dependent on upward water movement. In addition, it led to a shortage of groundwater available for drinking water, requiring an increase in the use of rivers as a source of drinking water. The high costs associated with the purification and processing of this water has resulted in an increase in the price of drinking water of approximately NLG 1 per m^3.

Strategy for sustainability

To meet environmental demands made by society, dairy farmers must either (a) practice more extensive farming, requiring the purchase of more land or the sale of their milk quota; or (b) export animal manure from the farm; or (c) use manure, feed and water more efficiently. The first two options are not attractive under Dutch conditions, that are characterised by land scarcity and large surpluses of manure. For this reason research has focused on the third option, i.e. increasing the efficiency of use of inputs through sophisticated management. In 1987, the report 'Melkveehouderij en Milieu' ('Dairy Farming and Environment') by the Centre for Agriculture and the Environment (CLM),

the Research Station for Dairy Farming (PR; later PV, Research Institute for Animal Husbandry) and the Centre for Agrobiological Research (CABO; later AB; now Plant Research International) proposed improvements in the efficiency of utilisation of nutrients at farm level. The report recommended a pilot farm be set up to investigate the possibilities for optimisation of farm nutrient management. It took from 1988–1992 to surmount all the emotional, organisational and financial obstacles, find a suitable location and actually build and lay out the farm.

The experimental farm 'De Marke'

The environmental standards set for the experimental farm are much more stringent than those defined in government manure regulations for the near future. The government standards represent a compromise between desirable environmental quality and agricultural problems that might be encountered in implementing them. In defining standards for the experimental farm, desirable environmental quality was the only criterion. The aim of the research was to maximise the profitability of the farming system within the limits of the applicable standards. To ensure relevance to commercial farming, milk production of 12,000 kg ha^{-1} was aimed for, the average at the end of the 1980s for Dutch dairy farms on sandy soils.

Models were used to calculate production for a wide range of situations with respect to herd size, soil conditions, crops cultivated and their management. The results were used to identify farming systems that in theory, at least, would meet the selected environmental standards. The system that appeared most promising from a research point of view has been implemented, investigated and improved on experimental farm 'De Marke' since 1992. The farm is located in the municipality of Hengelo, Gelderland. The land (55 ha) was reclaimed from heather around the turn of the twentieth century. A humic topsoil layer of 30 cm covers the subsoil of yellow sand. In most places the water table is several metres below the surface, out of reach for most crops. After a period of a few dry days there is a shortage of moisture, while after some days of rain the soil becomes saturated with the associated risk of leaching of soil nutrients. The soil is among the driest and most susceptible to leaching in the

Netherlands and was especially selected for these reasons. Because of these difficult conditions, problems come to the fore earlier and are more severe, so any advantages demonstrated by the farming system would be more convincing.

The system has been designed on the principle of minimising the amount of feed needed per kg milk produced. As much as possible, demand for feed is met from crops cultivated on-farm. The purchase of fertilisers is minimised by improving the efficiency of use of nutrients from manure produced on-farm. On 'De Marke', maize is grown on 45% of the arable land, almost double the area on commercial farms. The aim is to meet the need for feed low in protein, to compensate for the high protein content of grass. The maize crop can also be separated at harvest into energy-rich cobs and fibre-rich stover. The cobs can be used to replace concentrates, and the stover is an ideal component in the feed rations of dry cows and young stock. In addition, maize has the advantage of only needing limited amounts of moisture for growth (thus reducing the need for sprinkler irrigation) and limited amounts of fertiliser. In July, Italian ryegrass is sown between the maize, to prevent leaching into groundwater of nitrates that have not been taken up by the maize or that become available as a result of mineralization after the maize has been harvested.

The fields are divided into permanent grassland and two crop rotations of three years under grass, followed by three years (for inner fields, i.e. at a short distance from the farm buildings) or five years (for outer fields, i.e. further from the farm buildings) under maize. The grass and maize are fertilized at levels 40% below those on commercial farms. Sprinkling is applied only if necessary to prevent death by drought and/or to produce sufficient grass to continue grazing. Under these conditions it is possible to limit sprinkler irrigation of grass to 100 mm annually and of maize to 20 mm. Annual milk production per cow is 8,200 kg, approximately 1,000 kg higher than on commercial farms on sandy soils. Fewer animals are needed to realise the milk quota and that reduces the amount of feed required. As the milking herd is kept indoors during the afternoon and at night, the number of dung patches and urine spots at pasture is reduced. Urine spots are an important source of N emissions. Measures are taken to reduce emission of ammonia from the stable.

Results

Thanks to the increased area of maize cultivated (which needs less fertiliser than grass), lower levels of fertiliser use, and improved efficiency of nutrients from manure (fewer urine spots and dung patches), the need for mineral N fertiliser was reduced to 69 kg N ha^{-1}, i.e. 24% of current levels.
Application of inorganic phosphate fertilisers could be avoided. The lower fertilizer application levels for grass and maize reduced the gross yield of dry matter by 8-10% compared to the economically optimal level of fertiliser application. Net yield, by contrast, was approximately 10% higher than for commercial systems, thanks to lower grazing and harvest losses and the larger contribution from maize (on dry soil, maize yields per hectare are higher than those for grass). The combination of lower feed requirements (a smaller herd) and higher net crop yields led to a reduction of 58% in the quantity of feed purchased (2,015 kg ha^{-1}, dry matter) during the period 1994-1997, as compared to commercial farms on sandy soils with the same milk quota per hectare. The input of N through purchased feed was 33% lower, but nevertheless much higher than predicted. In practice it appeared more difficult to limit the N content in feed rations to the minimum nutritional levels. One reason is that the animals live in groups and the possibility of adjusting rations to meet individual needs is limited. Moreover, in summer, young stock graze day and night. On average, lactating cows were fed protein 6% above the recommended amount, dry cows and calves 39 and 108%, respectively.
The drastic reduction in input of minerals through feed and fertilizers has resulted in surpluses on the mineral balance of 153 kg N ha^{-1} and 2.5 kg P ha^{-1}, 62% less N and 94% less P than on commercial farms, but still 25 kg N and 2.5 kg P too much. Nevertheless, ammonia emission (- 72%, 21 kg N ha^{-1}) and leaching of nitrates (- 64%, 47 mg l^{-1} groundwater) are acceptable. Soil analyses have shown that a fraction of the surplus N in the soil does not contribute to environmental impact, because it accumulates in organic matter. The amount that can accumulate in the soil is limited, hence it is necessary to reduce the surplus.
Serious problems with soil fertility have not been encountered on 'De Marke'. After an initial fall, plant available P stabilised at levels at which crop yields need not be adversely affected. Average water use by crops is 570 m^3 ha^{-1} lower than in commercial farming systems. The costs per kg of milk are NLG 0.048 higher than in commercial farming systems (5% of the cost price). Savings in

the purchase of feed and mineral fertiliser are insufficient to compensate for the additional costs (hired and own labour, investments) involved in realising environmental goals. If the additional quantities of groundwater 'produced' are used in drinking water production, thus replacing surface water, the higher costs of this farming system will be more or less met by lower water purification costs.

Experience with the research method

The research method chosen ('prototyping') is not all well-known in agricultural science. Usually, components of the farming system are isolated, studied in comparative investigation, the identified relationships and mechanisms are modelled, and, subsequently, the farming system as a whole is studied without relating the farming system's actual performance to the model results. In the method implemented on 'De Marke', modelling and experimental research are intertwined. The experimental testing, i.e. prototyping, of an entire farming system that is theoretically acceptable, is characteristic of the method. At all times, the whole farm is the focal point. The fact that farming systems are usually unique, if only in terms of their size, implies that attempts to replicate them are generally futile. As a result, there are few opportunities for statistical analyses. In 'prototyping', the performance of the experimental system is investigated through intensive and specific monitoring and evaluated in consultation with experts. Generally accepted interpretations of observations take the place, in fact, of some of the certainties statistical analysis traditionally offers the researcher.

Communication plays an important role in the method. Communication with disciplinary experts is necessary to make the best use of their knowledge and experiences, with farming practice for practical suggestions stimulating improvements and with policy to anticipate societal demands. Thousands of people visit the research farm each year. It has become obvious that the research approach has encouraged the integration of ideas from farming practice, research and policy. 'Prototyping' has had a 'demonstration' effect, allowing ideas to take root much faster than normal. Researchers must also display their 'products'; they must be able to show what they can do.

The 'De Marke' approach is being applied in research into sustainable farming systems elsewhere in the Netherlands and abroad. Characteristically, the name

'De Marke' has evolved from a project and farm name into a product brand: in the United States a project has been launched, designated 'De Marke Wisconsin'; and in agricultural policy circles in The Hague reference is often made to 'De Marke' farms, to indicate farms that strive to meet societal goals and attempt to integrate these in their farming practice in a well thought out, professional and open manner. 'De Marke' farms for arable cropping and horticulture have been set up on the basis of experience gained in dairy farming.

The future

Since the initiation of the 'De Marke' project, the situation has changed for the dairy farming sector. Soon, meeting environmental standards will be considered part of everyday farming. The foundations of a legal framework have been laid down in the form of the Mineral Accounting System (MINAS). Land prices and the costs of manure export have increased to such an extent that shifts to either extensive farming or manure export have become expensive alternatives for meeting environmental standards.
A number of commercial farms has demonstrated that environmental performance can be considerably improved through improved management. These stand in contrast with the performance of the dairy farming sector as a whole: hardly any progress was made in realisation of environmental objectives between the mid-80s and mid-90s. However, in 2003, the surplus N on many farms will have to be reduced by 50% if they are to avoid paying heavy fines. The demand for knowledge, necessary to reduce the surplus will increase dramatically. To meet this demand from the sector, a project 'Cows & Opportunities' has been initiated. The 17 commercial farms that form the basis of this project will work on rapidly realising the defined environmental goals. These farms are not only the object of research, but they are partners in research too. They are encouraged to contribute their experience, knowledge and vision to the project. They have an important role to play in the dissemination of knowledge. Each farm is representative of a particular type of farming system in the sector (combinations of region, soil type, and farming intensity) and as such is recognisable to groups of dairy farmers.
The initial 'De Marke' project will focus on generating the knowledge expected to be required in the further future. Integration of nature and landscape

management, recreation and the 'production' of groundwater will be particularly important here. In effect, 'De Marke' is one step ahead of the farms participating in 'Cows & Opportunities', where the knowledge can be put into practice as soon as society has developed the means for adequately rewarding environmental achievements.

Samenvatting

Het efficiënt gebruik van grondstoffen als oplossing voor milieu-problemen van melkveebedrijven op zandgrond; resultaten van proefbedrijf 'De Marke'

H.F.M. Aarts[1], B. Habekotté[1], G.J. Hilhorst[2], G.J. Koskamp[3], F.C. van der Schans[3] & C.K.de Vries[2]

1) Plant Research International (Wageningen)

2) Praktijkonderzoek Rundveehouderij (PR, Lelystad)

3) Centrum voor Landbouw en Milieu (CLM, Utrecht)

Correspondentieadres: Plant Research International. Postbus 16, 6700AA Wageningen

Inleiding

De zandgronden in het midden, oosten en zuiden van Nederland worden vooral gebruikt door de melkveehouderij, en zijn bovendien belangrijk voor de winning van grondwater, voor natuur en recreatie. De bedrijven in deze gebieden hebben in de regel enkel melkvee en zijn intensief. Een gangbaar bedrijf heeft ongeveer 28 ha grond ter beschikking. Op 25% daarvan wordt maïs geteeld, de rest is grasland dat afwisselend wordt beweid en gemaaid. Er worden ongeveer 48 melkkoeien gehouden die jaarlijks 345.000 kg melk produceren (12.400 kg per ha, 500 kg meer dan gemiddeld in Nederland). Het aantal jonge dieren is vrijwel gelijk aan het aantal melkkoeien (Beldman & Prins, 1999). Om veel voer te produceren worden gewassen zwaar bemest en er wordt op ruime schaal kunstmatige beregening toegepast. Desondanks moet een flinke hoeveelheid voer worden aangekocht.

In het begin van de jaren tachtig brak het besef door dat de gangbare, intensieve bedrijfsvoering tot milieuproblemen leidt, waardoor de andere functies van het landelijke gebied in de knel komen. Van de stikstof (N), die een melkveebedrijf op zandgrond in die tijd binnen kwam (als voer, kunstmest of neerslag), bleek gemiddeld slechts 14% te worden afgevoerd met melk of vee. De rest van de aanvoer (486 kg ha^{-1}) verdween in het milieu, ondermeer door vervluchtiging als ammoniak en uitspoeling als nitraat (Aarts & Van Gorp, 1989). Van de aangevoerde fosfor (P) werd 33% benut. De rest (33 kg ha^{-1})

hoopte op in de bodem, tot die verzadigd raakte. De grondwateronttrekking voor beregening droeg bij aan het kwaliteitsverlies van kwelafhankelijke natuurgebieden. Bovendien ontstond een tekort aan grondwater voor drinkwaterbereiding, zodat meer water uit Rijn of Maas moest worden gebruikt, met extra kosten voor zuivering.

Vanaf het midden van de jaren tachtig heeft de overheid daarom geprobeerd het milieu te ontlasten, eerst door voorwaarden te stellen aan het gebruik van dierlijke mest en recent, in aanvulling daarop, door maxima te stellen aan de overschotten aan N en P op de bedrijfsbalans (Dekker & Van Leeuwen, 1998). Om deze maxima te realiseren zal het gemiddelde bedrijf a) moeten extensiveren, door grond aan te kopen of melkquotum te verkopen, b) dierlijke mest moeten afvoeren of c) mest, voer en water veel efficiënter moeten gaan benutten. De eerste twee opties zijn voor een veehouder economisch weinig aantrekkelijk, omdat grond duur is en de kosten van mestafzet hoog. Bovendien is het maatschappelijk gewenst vrijkomende grond te bestemmen voor andere doeleinden, waaronder nieuwe natuur. Mestafvoer zorgt mogelijk voor problemen elders. Het project 'De Marke' heeft zich daarom sinds 1987 gericht op de laatste optie, het verbeteren van de benutting van grondstoffen door verbeterd management. Een belangrijk onderdeel van het project is een proefbedrijf dat moet voldoen aan stringente milieunormen.

Het project is een initiatief van het Centrum voor Landbouw en Milieu (CLM), het Praktijkonderzoek Rundveehouderij (PR) en Plant Research International (voorheen AB-DLO). De ministeries van LNV en VROM en het Produktschap Zuivel financieren het project en zijn bestuurlijk verantwoordelijk. Achtergronden, werkwijze en resultaten van het project zijn vastgelegd in 24 'De Marke' rapporten en in een aantal op het (internationale) landbouwkundig onderzoek gerichte wetenschappelijke artikelen (Aarts *e.a.*, 1992; 1999; 2000a,b,c). Met dit artikel wil het projectteam een overzicht geven van de resultaten van het proefbedrijf met betrekking tot de verschillende milieuaspecten, ten behoeve van het Nederlandse overheidsbeleid, onderzoek en onderwijs, en stelt daarmee ook de verdere ontwikkeling van het proefbedrijf ter discussie.

Allereerst is aangegeven hoe het onderzoek wordt uitgevoerd, de werkwijze. Vervolgens wordt uitleg gegeven over het experimentele bedrijfssysteem 'De Marke' en worden de resultaten ervan in samenhang besproken. Tot slot wordt stilgestaan bij de praktische betekenis: hoe kan de samenleving de projectresultaten nuttig gebruiken en hoe gaan we verder?

Werkwijze van het project

Kenmerkend voor de melkveehouderij is de combinatie van plantaardige en dierlijke productie binnen één bedrijf. Door de uitwisseling van voer en mest tussen de plantaardige en dierlijke component van het bedrijf doorlopen mineralen een kringloop waaruit verliezen optreden. Om voor proefbedrijf 'De Marke' een geschikt bedrijfssysteem te vinden heeft het projectteam zowel voor de dierlijke als voor de plantaardige bedrijfscomponent de belangrijkste input-output relaties gekwantificeerd, waaronder de relatie tussen melkproductie en benodigd voer en tussen gewasgroei en benodigde meststoffen en benodigd water. Deze relaties werden vervolgens door het team gebruikt bij het opsporen van bedrijfssystemen die in theorie voldoen aan de gestelde eisen: een zo rendabel mogelijke melkproductie bij stringente voorwaarden met betrekking tot milieukwaliteit, rekening houdend met de wensen van de samenleving ten aanzien van dierwelzijn, natuur en grondstofverbruik. De voorwaarden met betrekking tot milieukwaliteit zijn gebaseerd op het eerste Nationaal Milieubeleidsplan (VROM, 1989). Het afvoeren van mest of het uitbesteden van de opfok van het jongvee is niet toegestaan omdat dit kan leiden tot afwenteling van problemen. Ter wille van de herkenbaarheid voor veehouders werd uitgegaan van een melkproductie van ongeveer 12.000 kg ha^{-1}, het gemiddelde in de zandgebieden aan het einde van de jaren tachtig (Aarts *e.a.*, 1992; Biewinga *e.a.*, 1992).

De milieunormen van 'De Marke' met betrekking tot mineralen (Tabel 1) zijn veel scherper dan de verliesnormen (overschotmaxima) die de overheid heeft geformuleerd in het kader van de mestwetgeving. De verliesnormen van de overheid zijn compromissen tussen wensen op het gebied van milieukwaliteit en verwachte landbouwkundige problemen bij het realiseren ervan (Dekker & Van Leeuwen, 1998). Op uitspoelingsgevoelige zandgrond mag het N-overschot (inclusief depositie, enige binding door vlinderbloemigen en de 'diercorrectie', de toeslag op de verliesnormen voor gras- en bouwland) van een gemiddeld bedrijf uiteindelijk nog steeds 190 kg ha^{-1} bedragen, het P-overschot 9 kg ha^{-1}. Bij 'De Marke' was de gewenste milieukwaliteit de enige maatstaf. In Tabel 1 is ook aangegeven in welke mate de normen van 'De Marke' afwijken van de werkelijke verliezen in het midden van de jaren tachtig. Aan intensivering kwam toen een einde door de melkquotering en er werd een begin gemaakt met mestbeleid. Die periode kan daarom worden gezien als een keerpunt in de milieubelasting en dienen als referentie om verbeteringen van milieuprestaties

van de melkveehouderij te meten. Duidelijk is dat de mineralenverliezen van het proefbedrijf maar een kleine fractie mogen zijn van de verliezen in de referentieperiode. De niet in Tabel 1 genoemde milieudoelen hebben vooral betrekking op het gebruik van bestrijdingsmiddelen, de ophoping van zware metalen (stand-still principe), de emissie van broeikasgassen, het verbruik van water en energie en de ontwikkeling van natuurwaarden. Voor deze doelen gelden in de regel alleen streefwaarden, geen minima of maxima die onvoorwaardelijk gerealiseerd moeten worden.
Van de bedrijfssystemen die in theorie aan de normen voldeden is het onderzoekstechnisch meest interessante systeem in 1992 in praktijk gebracht op een speciaal voor dit doel aangekocht bedrijf, en wordt sindsdien als systeem 'De Marke' verder ontwikkeld. Door omvang en kosten was het in veelvoud aanleggen van het experimentele systeem niet realistisch, het is dus uniek. Het functioneren ervan wordt zo volledig mogelijk in kaart gebracht door de stof- en mineralenstromen waar mogelijk te meten en te analyseren. Dat houdt in dat per perceel nauwkeurig wordt vastgesteld hoeveel meststof wordt uitgereden en hoeveel gewas wordt geoogst. Het voer dat de dieren op

Tabel 1. Normen van proefbedrijf 'De Marke' met betrekking tot mineralenverliezen en de beoogde afname ten opzichte van de verliezen van gangbare bedrijven in de (referentie)periode 1983-1986 (Aarts e.a., *1992; Biewinga* e.a., *1992).*

Doel	Maximale waarde 'De Marke'	Afname t.o.v. gangbaar
Stikstof (N)		
- vervluchtiging ammoniak	30 kg N kg ha^{-1}, uit dierlijke mest	70 %
- uitspoeling nitraat	50 mg nitraat l^{-1}, in het bovenste grondwater	75 %
- vervluchtiging stikstofoxiden	3 kg ha^{-1}	66 %
- overschot op bedrijfsbalans	128 kg ha^{-1}, inclusief depositie en binding door vlinderbloemigen	74 %
Fosfor (P)		
- uitspoeling	0,15 mg P l^{-1}, in het bovenste grondwater	?
- overschot op bedrijfsbalans	0,45 kg P kg ha^{-1}, inclusief depositie	99 %

stal krijgen wordt gewogen. De opname tijdens beweiding wordt vastgesteld door het schatten van de hoeveelheid gras bij in- en uitscharen en het veronderstellen van een zekere bijgroei per dag. Deze schatting wordt periodiek gecontroleerd door maaien. De binding van elementaire N door klaver wordt berekend door te veronderstellen dat per ton oogstbare droge stof 45 kg N wordt gebonden (Baan Hofman, 1995; Baan Hofman, 1999). De N depositie wordt afgeleid uit literatuurgegevens (Erisman *e.a.*, 1987; Heij & Erisman, 1997).

Elk jaar wordt van alle percelen de bodemlaag 0-30 cm bemonsterd om het verloop van de bodemvruchtbaarheid te kunnen volgen. Bovendien worden op een aantal representatieve plaatsen gedetailleerde waarnemingen verricht om het inzicht te vergroten in de processen die zich in de bodem afspelen, met name rond water, organische stof, N en P (Hack-ten Broeke & Aarts, 1996). In het najaar wordt het bovenste grondwater van 'De Marke' door het RIVM bemonsterd op 137 vaste plekken (Boumans & Fraters, 1995). Nitraatgehalten worden eerst per perceel gemiddeld, vervolgens per kavel en tot slot voor het bedrijf als geheel. De vervluchtiging van ammoniak uit de stal wordt continu gemeten, de vervluchtigen tijdens en na beweiding of mest uitrijden incidenteel. De ammoniakemissie van het bedrijf wordt berekend uit deze metingen, normatieve vervluchtigingspercentages (waar metingen ontbreken) en de hoeveelheden N in de meststromen van het bedrijf. De resultaten van het experimentele systeem worden vergeleken met de prognoses (modeluitkomsten) en met de resultaten van een denkbeeldig hedendaags gangbaar bedrijf met een vergelijkbare melkproductie per ha, samengesteld op basis van literatuur, databestanden (CBS, 1998; Daatselaar *e.a.*, 1998; Fraters *e.a.*, 1997) en deskundigenoordeel. In het algemeen komen de hoofdkenmerken van dit bedrijf goed overeen met de gemiddelden van de bedrijven op zandgrond (Beldman & Prins, 1999).

De in het project toegepaste methode van onderzoek, 'prototyping', heeft enkele belangrijke voordelen. De samenhang van bedrijfsonderdelen komt sterk in beeld en de overdracht van kennis wordt bevorderd omdat mensen het experimentele bedrijf kunnen bezoeken. Door een brug te slaan van theorie naar experimentele toetsing wordt voorkomen dat achter het bureau lang wordt nagedacht over elementen die in de praktijk minder belangrijk blijken, of dat anderzijds te weinig aandacht wordt besteed aan belangrijke zaken. Prototyping heeft ook nadelen. Het experimentele systeem moet gekozen worden uit meerdere mogelijkheden. Omdat slechts één systeem in praktijk

wordt gebracht, dat zich bovendien ontwikkelt, kunnen resultaten in de regel niet statistisch worden getoetst. Deze nadelen worden zo goed mogelijk ondervangen door zeer uitgebreid en gericht te meten en door het jaarlijks ter discussie stellen van de resultaten tijdens een themadag, waarvoor ongeveer 60 deskundigen worden uitgenodigd. Het beeld dat zodoende ontstaat wordt besproken met de mensen die het bedrijf bezoeken, ongeveer 7.000 per jaar. Het zoveel mogelijk betrekken van mensen, die direct of indirect belang hebben bij de melkveehouderij, hoort bij de methode.
Bij de start van het project was de onderzoeksmethode ongebruikelijk en (dus) omstreden. Gebruikelijk was onderdelen uit bedrijfssystemen te isoleren, te analyseren, indien nodig vergelijkend experimenteel te onderzoeken, gevonden wetmatigheden in modellen te vatten en het functioneren van systemen als geheel vervolgens modelmatig te verkennen. Aan terugkoppeling van realiteit naar model, van werkelijkheid naar hypothese, werd op bedrijfsniveau in de regel weinig aandacht besteed. Het beoordelen van de methode, als mogelijkheid om duurzame landbouwsystemen te ontwikkelen, hoorde daarom tot de projectopdracht.

Opzet van het experimentele systeem 'De Marke'

Proefbedrijf 'De Marke' ligt in de Gelderse gemeente Hengelo, in De Achterhoek, en is 55 ha groot. Het bedrijf heeft daardoor op dit moment bijna twee keer zoveel grond ter beschikking als het gemiddelde bedrijf in de zandgebieden, maar de Nederlandse Land- en Tuinbouw Organisatie verwacht dat melkveebedrijven in 2010 ongeveer deze grootte zullen hebben (LTO, 1997). De grond is rond de eeuwwisseling ontgonnen uit heide. Een humeuze bovenlaag van 30 cm dik ligt op ondoorwortelbaar geel zand. Grondwater bevindt zich op de meeste plaatsen enkele meters diep, zodat het gewas er niet bij kan. Na enige dagen droogte is er vochttekort, na enige dagen regen is de grond met water verzadigd en kunnen meststoffen uitspoelen. De grond behoort daardoor tot de meest droogte- en lekgevoelige van Nederland. Daar is bewust voor gekozen. Door in landbouwkundig èn milieukundig opzicht moeilijke omstandigheden te kiezen komen problemen sneller en nadrukkelijker in beeld en wint het experimentele systeem aan overtuigingskracht.
Het bedrijfssysteem is zodanig opgezet dat zo weinig mogelijk voer nodig is om het quotum van 12.000 kg ha^{-1} vol te melken, waarbij in die voederbehoefte zo

veel mogelijk wordt voorzien door gewassen die op het bedrijf zelf worden geteeld. Bij de teelt wordt de aankoop van (kunst)mest zoveel mogelijk vermeden door een zo goed mogelijke benutting van de dierlijke mest van het bedrijf. De uitwerking van deze benadering leidt tot een aantal kenmerkende verschillen met hedendaagse gangbare bedrijven op zandgrond met een vergelijkbaar melkquotum (Tabel 2). 'De Marke' teelt relatief veel maïs. De belangrijkste reden is de behoefte aan eiwitarm voer, om in het rantsoen het hoge eiwitgehalte van gras te compenseren en daarmee de uitscheiding van N in mest te verlagen. Bovendien kan maïs bij de oogst worden gesplitst in energierijke kolven en vezelrijk stro. De kolven kunnen krachtvoer vervangen, het stro past uitstekend in het rantsoen van droogstaande koeien en jongvee. Andere motieven zijn de geringe vochtbehoefte van maïs, waardoor minder hoeft te worden beregend, en de geringe behoefte aan meststoffen. In juli wordt, tussen de rijen maïs, Italiaans raaigras gezaaid. Dat gebeurt met een machine die zaaien en mechanische onkruidbestrijding in één werkgang combineert, en daarmee de kosten èn het energieverbruik beperkt. Het gras moet voorkomen dat nitraat-N die niet door de maïs wordt opgenomen, of na de maïsoogst door mineralisatie vrij komt, naar het grondwater spoelt.

Tabel 2. Kenmerken van 'De Marke' en van een gangbaar bedrijf met dezelfde melkproductie per ha (1994-1997).

	'De Marke'	Gangbaar
Veestapel		
- Melk per koe (kg per jaar)	8.200	7.250
- Aantal koeien per ha	1,45	1,64
- Stuks jongvee per ha	1,0	1,5
- Weideseizoen	1 mei – 1 okt.	1 mei – 1 nov.
- Weidegang melkvee (uren per dag)	8	14
Grond en gewas		
- Aandeel grasland (%)	55	75
- Aandeel maïsland (%)	45	25
- Periode uitrijden mest	1 mrt. – 15 aug.	1 febr. – 1 sept.
- Afwisseling bouwland en grasland	Ja	nee
- Vanggewas, geteeld in maïsstoppel	Ja	nee

De grond is verdeeld in blijvend grasland en twee rotaties van drie jaar gras, gevolgd door drie jaar (rotatie huiskavel) of vijf jaar (rotatie veldkavel) maïs. De bemestingsniveaus, als som van drijfmest en kunstmest, zijn gemiddeld 40% lager dan gangbaar. Het eerste jaar wordt maïs niet bemest, omdat voldoende mineralen vrij komen uit de ondergeploegde graszode, de jaren daarna uitsluitend met drijfmest. Gemiddeld wordt op maïsland per ha 26 m^3 drijfmest uitgereden, op blijvend grasland 49 m^3 en op tijdelijk grasland 72 m^3 (1 m^3 mest bevat 3,54 kg N en 0,48 kg P). Grasland krijgt bovendien 124 kg N ha^{-1} in de vorm van kunstmest. De periode waarin geen mest wordt uitgereden is langer dan gebruikelijk en de benodigde opslagcapaciteit daardoor groter.
Het blijvend grasland en de gewassen van de huiskavel worden alleen beregend als dat nodig is om te voorkomen dat gewassen door droogte afsterven, of om voldoende vers gras te kunnen produceren om enigszins te kunnen blijven beweiden. De veldkavel, 30% van het areaal, wordt nooit beregend.
De melkproductie per koe is beduidend hoger dan op gangbare bedrijven, waardoor minder dieren nodig zijn om het melkquotum vol te melken. Het melkvee wordt alleen in de ochtend en avond geweid (siësta-systeem), waardoor de uitscheiding van urine en mest in het weiland sterk wordt beperkt. Door de zeer hoge concentratie nitraat in urine- en mestplekken (ammoniak wordt omgezet in nitraat) is het risico op uitspoeling uit deze 'hot spots' bijzonder groot. In de herfst wordt om dezelfde reden één maand eerder opgestald. Door minder te beweiden wordt bovendien een groter deel van de mest op stal uitgescheiden, waardoor meer bedrijfseigen mest kan worden uitgereden en minder kunstmest hoeft te worden aangekocht.

Resultaten van het experimentele systeem 'De Marke'

Verbruik grondstoffen

In vergelijking met een gangbaar bedrijf in dezelfde periode (1994-1997) kon de aanvoer van kunstmest met 71% (voor stikstof) en 100% (voor fosfaat) worden beperkt door relatief veel maïs te telen (geringe mestbehoefte vergeleken met gras), lagere bemestingsniveaus en een betere benutting van dierlijke mest (Tabel 3). Door de krappe bemesting was de bruto gewasopbrengst 8-10% lager, zo bleek uit proeven met verschillende bemestingsniveaus (Baan Hofman, 1999). De gemiddelde netto gewasopbrengst, de hoeveelheid die door het vee

wordt geconsumeerd is op praktijkbedrijven nauwelijks direct vast te stellen. Om de netto gewasopbrengst van bedrijven te vergelijken is het gebruikelijk deze indirect te bepalen uit de voederbehoefte van de veestapel en de voeraankoop. Voor elke categorie dieren zijn normen opgesteld met betrekking tot de energiebehoefte. Onderzoek heeft uitgewezen dat die een redelijk betrouwbaar beeld geven van de energieopname (Van Es, 1978). Van de totale energiebehoefte van de veestapel wordt de energie in aangekocht voer (bekend uit voederanalyses) afgetrokken. Het resterende deel moet afkomstig zijn van eigen voer en kan worden ongerekend naar een netto opbrengst per hectare. De op deze wijze berekende netto gewasopbrengst was voor 'De Marke' ongeveer 10% hoger dan voor vergelijkbare gangbare bedrijven. De groeireductie van de gewassen, veroorzaakt door minder bemesten, werd ruimschoots gecompenseerd door geringere beweidings- en oogstverliezen en door het grotere aandeel maïs; dat gewas brengt op droge grond per hectare meer op dan gras. Door de combinatie van een lagere behoefte aan voer (door minder dieren) en een hogere netto gewasopbrengst is de jaarlijkse aankoop van voer slechts 2.015 kg droge stof ha^{-1}, 58% minder dan gangbaar. Met de lagere aanvoer van voer en kunstmest daalde ook de aanvoer van zware metalen, zodat het overschot aan koper (Cu), cadmium (Cd) en zink (Zn) respectievelijk -7 g ha^{-1}, -1,1 g ha^{-1} en 96 g ha^{-1} bedroeg, vergeleken met 25 g ha^{-1}, 1,2 g ha^{-1} en 130 g ha^{-1} voor een gangbaar bedrijf. De doelen met betrekking tot zware metalen werden dus gerealiseerd, met uitzondering van zink.

Het directe energieverbruik van 'De Marke' is hoger dan op gangbare bedrijven. Dat komt vooral door mechanische onkruidbestrijding, door het gebruik van een mestschuif in de stal (snelle afvoer mest naar afgesloten opslag) en door het regelmatig scheuren van grasland (grasland wordt afgewisseld met bouwland). Het indirecte verbruik is daarentegen laag: voor de productie van krachtvoer en kunstmest is veel energie nodig. Het totale energieverbruik is ongeveer de helft van dat van een gangbaar bedrijf.

Het verbruik van water bij de teelt van gewassen kon gemiddeld met 13% (570 m^3 ha^{-1}) worden beperkt, ten opzichte van het verbruik van een gangbaar bedrijf, door meer maïs te telen (grasland bleek jaarlijks gemiddeld met 960 m^3 ha^{-1} te moeten worden beregend, maïs met 200 m^3 ha^{-1}), minder te bemesten (bij tragere groei minder waterverbruik) en terughoudend beregenen (Aarts *e.a.*, 2000c).

De kosten van de milieumaatregelen die 'De Marke' heeft doorgevoerd zijn

Tabel 3. Het verbruik van externe grondstoffen door 'De Marke' en het verschil met gangbare bedrijven (1994-1997; Aarts e.a., 1999).

	Verbruik	Afname t.o.v. gangbaar
Kunstmest-N (kg ha^{-1})	69	71 %
Kunstmest-P (kg ha^{-1})	0	100 %
Aangekocht voer (kg droge stof ha^{-1})	2015	58 %
Waterverbruik gewassen (m^3 ha^{-1})	3670	13 %
Energie, direct (MJ ha^{-1})	11020	-9 %
Energie, indirect (MJ ha^{-1})	33060	58 %

modelmatig berekend. Kunstmest en voer zijn relatief goedkope productie middelen. De besparingen daarop in financiële zin bedragen daardoor slechts 1,5 cent per kg melk (De Haan & Mandersloot, 1998). Dat is niet voldoende om de extra kosten van het systeem te compenseren. Een deel van de extra kosten (0,6 cent) bestaat uit extra arbeid van de veehouder, ondermeer voor het 's middags opstallen van het melkvee. Ook de bedrijfsuitrusting is duurder (1,7 cent). Daarbij kan gedacht worden aan de emissiearme stal en extra mestopslag, nodig vanwege de kortere periode waarin mest kan worden uitgereden. De kosten voor loonwerk zijn flink hoger (2,1 cent), ondermeer omdat in een wisselbouwsituatie vaker grasland moet worden ingezaaid en door het gescheiden oogsten van maïs als kolven en stro. Per saldo zijn de extra kosten die de stringente milieunormen met zich meebrengen 4,8 cent per kg melk, een kostprijsverhoging van 5%.

Mineralenhuishouding

Vooral als gevolg van de sterk beperkte behoefte aan meststoffen en voer van buiten het bedrijf was de totale aanvoer van N en P respectievelijk 53 en 71% lager dan bij een gangbare bedrijfsvoering (Tabel 4). De lage veebezetting komt tot uiting in de beperkte afvoer van N en P als rundvee. De totale afvoer wordt vooral bepaald door de (gelijke) melkafvoer, zodat de beperkte afvoer van vee weinig effect heeft op de overschotten op de mineralenbalans. Het N-overschot (153 kg ha^{-1}) was 62% lager dan dat van gangbare bedrijven,

het P-overschot (2,5 kg ha^{-1}) zelfs 94%. Het doel, een maximaal overschot van 128 kg N ha^{-1} en 0,45 kg P ha^{-1}, werd wel benaderd maar (nog) niet gerealiseerd. Het gerealiseerde N-overschot is ongeveer 40 kg ha^{-1} lager dan het uiteindelijke maximum in de mestwetgeving, het P-overschot 6,5 kg ha^{-1}.
De aanvoer van N en P met aangekocht voer bleek groter dan vooraf verondersteld. In de praktijk bleek het te lastig de hoeveelheden N en P in het rantsoen te beperken tot niveaus die nodig zijn uit voedingsoogpunt. Een belangrijke reden is dat de dieren in groepen leven, en voeren op individuele behoeften daardoor maar beperkt mogelijk is. Het gemiddeld op een behoeftenorm voeren kan tot tekorten leiden bij individuele dieren. Ook het benodigde aantal stuks jongvee (0,69 koe^{-1}) om oude koeien te vervangen was groter dan

Tabel 4. De mineralenbalansen (kg ha^{-1}) van een gangbaar bedrijf en van 'De Marke' (prognose op basis van modelberekeningen; gerealiseerd in de periode 1994-1997; Aarts e.a., *1999, 2000a, 2000b).*

	Gangbaar gerealiseerd		'De Marke' prognose		'De Marke' gerealiseerd	
	N	P	N	P	N	P
Aanvoer:						
Krachtvoer	125	21,5	41	5,9	78	11,8
Ruwvoer	20	1,0	0	0,0	18	2,1
Kunstmest	242	18,0	67	6,0	69	0,0
Dierlijke mest	50	12,5	0	0,0	0	0,0
Depositie	49	0,9	49	0,9	49	0,9
Overige	0	0,0	35*	0,0	13*	0,9
Som	*486*	*53,9*	*192*	*12,8*	*226*	*15,7*
Afvoer:						
Melk	64	10,5	62	10,6	64	10,5
Rundvee	14	4,1	8	2,2	9	2,7
Som	*78*	*14,6*	*70*	*12,8*	*73*	*13,2*
Overschot	*407*	*39,3*	*122*	*0,0*	*153*	*2,5*
Benutting (afvoer/aanvoer)	*16%*	*27%*	*36%*	*100%*	*32%*	*84%*

* *vooral N-binding door klaver*

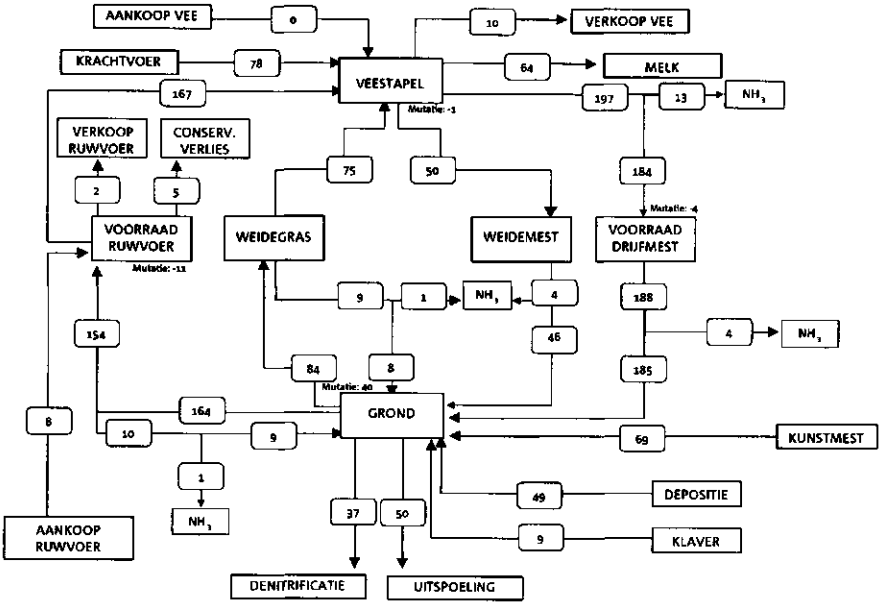

Figuur 1. De N-kringloop van De Marke (1994-1997; kg ha^{-1}; Aarts e.a., 1999).

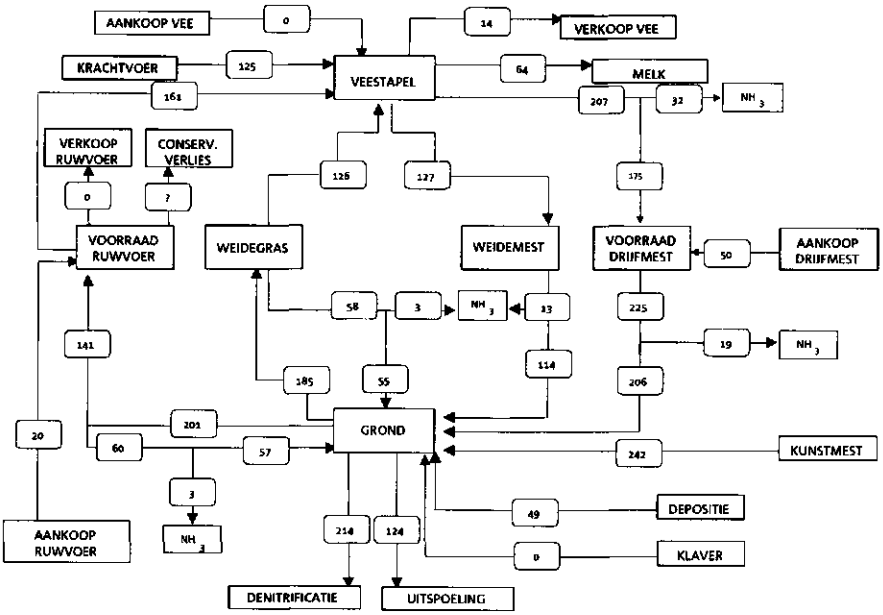

Figuur 2. De N-kringloop van een gangbaar bedrijf (1994-1997; kg ha^{-1}; Aarts e.a., 1999).

verwacht (0,57 koe^{-1}), ondermeer omdat koeien vervroegd moesten worden geslacht nadat ze op de emissie-arme, maar gladde, vloer waren uitgegleden. Het grootbrengen van één kalf vergt op 'De Marke' 120 kg N als voer, waarvan minder dan 10% wordt vastgelegd in het dier, en extra jongvee is dus onaantrekkelijk uit oogpunt van een efficiënte benutting van grondstoffen. De vloer is intussen vervangen door een minder gladde met dezelfde milieuprestaties.

De figuren 1 en 2 tonen de belangrijkste N-stromen van 'De Marke' en van een vergelijkbaar gangbaar bedrijf. Opvallend is dat het vee van 'De Marke' veel minder N als weidegras en krachtvoer consumeert. De opname van maïs- en grassilage is daarentegen vrijwel gelijk. Daardoor is de totale N-opname van de veestapel veel geringer waardoor op 'De Marke' 23% wordt omgezet in melk en vlees, vergeleken met 19% op het gangbare bedrijf. Er komt daardoor minder N in mest en urine terecht. De hoeveelheid N die tijdens beweiding als mestflat of urineplek in het weiland terecht komt is slechts 39% van die van een gangbaar bedrijf. Omdat ook minder meststoffen van buiten het bedrijf worden aangevoerd is de hoeveelheid N die aan de bodem wordt toegediend veel lager. Door het kleinere aandeel grasland is de opname van N uit de bodem weliswaar ook lager, maar daar staat tegenover dat gewassen beter worden benut als voer, waardoor minder N als vertrapt gras of oogstverlies naar de bodem terugkeert. Per saldo is het N-overschot van de bodem bij gangbare bedrijven 337 kg ha^{-1}, bij 'De Marke' slechts 125 kg ha^{-1}. Dit overschot accumuleert als organische stof, spoelt uit als nitraat of denitrificeert tot elementaire N of stikstofoxiden. De berekende emissie als stikstofoxide was 5 kg N ha^{-1}, vergeleken met 9 kg N ha^{-1} op gangbare bedrijven (Velthof & Oenema, 1997). Het verlies van ammoniak uit mest is op 'De Marke' 21 kg N ha^{-1}, ongeveer éénderde van dat van gangbare bedrijven (64 kg N). Het doel, een verlies van maximaal 30 kg N ha^{-1}, werd daarmee gerealiseerd.

Kwaliteit grondwater

Uit de metingen van het RIVM bleek het P-gehalte van het bovenste grondwater met een waarde tussen 0,01 en 0,06 mg l^{-1} steeds veel lager te zijn dan 0,15 mg l^{-1}, de norm die 'De Marke' zichzelf heeft opgelegd. Door de lage grondwaterstand wordt P, als die de wortelzone al mocht verlaten, in de bodem aan bijvoorbeeld ijzerdeeltjes gebonden voordat het grondwater bereikt is (Aarts *e.a.*, 2000b).

Tabel 5. Gemiddelde nitraatgehalten (mg l^{-1}) van het bovenste grondwater van de percelen van 'De Marke' die sinds 1989 in gebruik zijn (Aarts, e.a., 2000a).

	1990	1992	1993	1994	1995	1996	1997
Blijvend grasland	159	80	50	43	60	52	96
Huiskavel	220	117	43	46	54	36	49
Veldkavel	181	104	53	35	35	20	47
Bedrijf gemiddeld	*199*	*107*	*47*	*43*	*51*	*35*	*57*

Tabel 6. De gemiddelde nitraatgehalten (mg l^{-1}) van het bovenste grondwater onder percelen met gras en maïs van 'De Marke' (en voor bedrijf als geheel 1995-1997; Aarts e.a., 2000a).

	Gras	Maïs
Blijvend grasland	71	--
Huiskavel	49	39
Veldkavel	36	42
Bedrijf gemiddeld	*55*	*40*

Het verloop van de nitraatgehalten van het bovenste grondwater is weergegeven in Tabel 5. Opvallend is de snelle afname tussen 1990 en 1993. De verwachting was dat het veel langer zou duren voordat voldaan zou kunnen worden aan de nitraatnorm (50 mg l^{-1}), omdat in het recente verleden grote hoeveelheden dierlijke mest werden gebruikt en verwacht werd dat daaruit nog aanzienlijke hoeveelheden nitraat langzaam zouden vrijkomen (Oenema & Roest, 1998). Tussen 1993 en 1996 bleven de nitraatgehalten vrij constant. In 1997 is het bedrijfsgemiddelde weer tot iets boven de norm gestegen, vooral door de hoge gehalten onder blijvend grasland. Het weer heeft zeker invloed gehad op het verloop van de gehalten. De natte (na)jaren 1993 en 1994 zullen geleid hebben tot lagere gehalten door verdunning (Hack-ten Broeke *e.a.*, 1999). Veel neerslag is niet altijd gunstig. Een neerslagrijke periode in de voorzomer kan door het beperkte vochthoudend vermogen van de wortelzone tot uitspoeling van meststoffen leiden, voordat gewassen kans hebben gehad

de meststoffen op te nemen. De kans daarop is het grootst bij pas ingezaaid gras en maïs. De relatie tussen soort gewas en nitraatgehalte is weergegeven in Tabel 6. De relatief hoge waarden onder blijvend grasland en onder grasland op de huiskavel zijn waarschijnlijk het gevolg van intensievere beweiding met melkvee. De nitraatgehalten onder het minder beweide grasland op de veldkavel (alleen jongvee) en die onder maïs komen redelijk met elkaar overeen en liggen onder de norm van 50 mg l^{-1}. Uit waarnemingen van het RIVM in het kader van het 'Landelijk Meetnet Effecten Mestbeleid' blijkt dat het bovenste grondwater van (enkele tientallen) melkveebedrijven op zandgrond in 1992, 1993 en 1995 gemiddeld respectievelijk 189, 188 en 88 mg nitraat l^{-1} bevatte (Fraters *e.a.*, 1997; Oenema *e.a.*, 1998). De hoge gehalten onder praktijkpercelen zijn goed verklaarbaar vanuit het hoge N-overschot van dergelijke bedrijven (gemiddeld ongeveer 410 kg ha^{-1}) in combinatie met het beperkte denitrificerend vermogen van zandgrond bij de hedendaagse grondwaterstanden van 1 tot 3 m beneden maaiveld (Van der Molen *e.a.*, 1998).

Bodemvruchtbaarheid

Omdat de hoeveelheid voer die moet worden aangekocht afhangt van de hoeveelheid 'bedrijfseigen' voer heeft de bodemvruchtbaarheid indirect invloed op de mineralenhuishouding van het bedrijf.
De voorraad P (P-totaal) in de bovenste 30 cm van de bodem bleef redelijk constant op een niveau van ruim 70 mg P/100 g droge grond, overeenkomend met 2.800 kg ha^{-1} (Tabel 7). De hoeveelheid P die zo goed oplosbaar is dat deze door een gewas aan de bodem kan worden onttrokken, aangeduid met P_w (maat voor bouwland) en P-Al (maat voor grasland), nam tot 1995 af met respectievelijk 26% en 15%, maar bleef daarna op niveaus die landbouwkundig gezien geen problemen hoeven te geven. De oplosbaarheid van P in de bodem is dus afgenomen en daarmee waarschijnlijk ook de uitspoeling naar lagen onder de wortelzone.

Tabel 7. Resultaten bodemanalyses van 'De Marke', laag 0-30 cm (P_w en P-Al zijn indicatoren voor de hoeveelheden P die door het gewas opneembaar zijn, met de waarden 31 en 40 als grenswaarden voor 'landbouwkundig ruim voldoende'; Aarts e.a., 2000 a,b).

	Eenheid	1989	1994	1995	1996	1997
P-totaal	mg P/100 g droge grond	73	72	72	70	71
P_w	mg P_2O_5 /liter droge grond	57	49	42	44	44
P-Al	mg P_2O_5 /100 g droge grond	75	69	64	65	65
Organische stof	g/100 g droge grond	4,8	4,9	4,8	4,6	4,7
N-totaal	mg N/100 g droge grond	142	144	138	149	157

De hoeveelheid N die aan organische stof is gebonden (N-totaal) neemt af door mineralisatie en toe door de aanvoer van dierlijke mest en gewasresten. Per saldo lijkt er sprake te zijn van een jaarlijkse toename van gemiddeld 1 mg N/100 g droge grond. Dat komt ongeveer overeen met 40 kg N ha^{-1} jr^{-1}. De snelheid van afbraak van organisch gebonden N (mineralisatie) wordt sterk beïnvloed door het weer. In een nat groeiseizoen bleek 90 kg N ha^{-1} meer vrij te komen dan in een droog (Aarts, 1996). Bij een ophoping van 40 kg N ha^{-1} zijn de jaarlijkse verliezen van het systeem in werkelijkheid geen 153 kg N ha^{-1} (overschot op de N-balans, Tabel 4), maar slechts 113 kg N ha^{-1}. Structurele veranderingen in bodemvoorraden organisch gebonden N kunnen pas op de lange duur voldoende betrouwbaar worden vastgesteld, door de invloed van grote beginvoorraden van de bodem (gemiddeld 5.500 kg ha^{-1}) en het weer. Het organische stofgehalte bleef vrij constant.

Praktische betekenis van het project

Op proefbedrijf 'De Marke' is gebleken dat door zorgvuldig management de aanvoer van mineralen in voer en meststoffen met 62% (N) en 73% (P) kan worden beperkt, vergeleken met een gangbare bedrijfsvoering. De overschotten op de mineralenbalans dalen dan scherp en doelen met betrekking tot de milieukwaliteit kunnen worden gerealiseerd. De eisen die aan praktijkbedrijven in de zandgebieden door de overheid worden gesteld zijn veel minder streng, en de omstandigheden in de regel een stuk gunstiger

(bodem minder droogte- en uitspoelingsgevoelig). Het is daarom aannemelijk dat de meeste vakbekwame melkveehouders aan de eisen van de overheid kunnen voldoen zonder extra grond aan te kopen of mest af te voeren.
Door de strenge milieunormen die 'De Marke' zichzelf heeft opgelegd stegen de productiekosten van de melk met 4,8 cent per kg. Milieuzorg kent gelukkig ook baten. Bij de teelt van gewassen kon per ha 570 m^3 water worden bespaard. Door een toenemende vraag naar drinkwater, en een tekort aan grondwater als grondstof daarvoor, moeten waterwinbedrijven steeds meer gebruik maken van oppervlaktewater. De extra zuivering die dan nodig is verhoogt de kostprijs met fl 1,-- per m^3 (pers. med. L. Joosten, VEWIN). Als het bespaarde water wordt gebruikt om oppervlaktewater te vervangen levert dat een kostenbesparing op die vrijwel gelijk is aan de extra kosten die 'De Marke' maakt om al haar milieudoelen te realiseren. De meerwaarde van het bedrijfssysteem in termen als verbeterde kwaliteit van natuur en landschap, als verlengde van een verbeterde milieukwaliteit, zijn nog niet in geld uit te drukken. Duidelijk is wel dat de Europese Unie de aanzienlijke subsidiering van melkproductie wil ombuigen ten gunste van een maatschappelijk gewenst beheer van de groene ruimte ('cross compliance' of 'voor wat hoort wat').
De voor het onderzoek gebruikte methode is een succes gebleken en vindt intussen navolging in binnen- en buitenland (Bouma, 1999). Met name de mogelijkheid om door middel van een experimenteel systeem met de samenleving te communiceren over problemen, oplossingen en kansen, wordt als waardevol ervaren. De toekenning, in 1996, van de milieuprijs van het Teyler Initiatief (kennisoverdracht op het gebied van milieutechnologie) bevestigt dit beeld. Op verzoek van de ministers van LNV en VROM is een 'De Marke' project gestart in de akker- en tuinbouw. In de Verenigde Staten wordt een project opgezet met 'De Marke Wisconsin' als naam (Noorduyn, 2000). Dat geeft aan dat de naam 'De Marke' steeds meer in verband wordt gebracht met een bedrijfsstijl of ontwikkelingsstrategie en minder met het oorspronkelijke proefbedrijf of project zelf. In beleidskringen wordt over 'De Marke'-bedrijven gesproken als gedoeld wordt op bedrijven die de wensen van de samenleving positief benaderen en op een weloverwogen, vakbekwame wijze willen vertalen naar bedrijfsvoering, en daar bovendien open over willen communiceren.
Sinds de start van het project, in 1987, zijn de omstandigheden voor de melkveehouderij danig veranderd. Milieunormen zijn geaccepteerd, een wettelijk kader om ze te realiseren is gereed in de vorm van het Mineralen

Aangifte Systeem (MINAS) met de daarin opgenomen verliesnormen. Grondprijzen en kosten van mestafzet zijn sterk toegenomen, waardoor extensiveren of het afvoeren van mest nog duurdere oplossingen zijn om aan de milieunormen te voldoen. Ook een aantal praktijkbedrijven heeft al laten zien dat milieuprestaties aanzienlijk kunnen verbeteren door slim management. Daarbij zijn ze mogelijk geïnspireerd door 'De Marke'. In contrast daarmee staan de prestaties van de melkveehouderij als geheel: de milieuprestaties zijn maar weinig verbeterd. Het N-overschot van het vergelijkingsbedrijf van 'De Marke' is van het midden van de jaren tachtig tot het midden van de jaren negentig met 80 kg afgenomen tot 407 kg ha^{-1}, het P-overschot toegenomen met 7,43 kg ha^{-1} tot 39,3 kg ha^{-1}.
De komende jaren wordt inefficiënt mineralenbeheer duidelijk kostbaarder dan voorheen. Het N-overschot van veel melkveebedrijven zal binnen enkele jaren gehalveerd moeten zijn om hoge boetes te ontlopen. De vraag naar kennis, om het overschot terug te kunnen dringen, zal dan ook sterk toenemen. Om de brede praktijk te laten profiteren van de ervaringen van 'De Marke' is een project opgezet, genaamd 'Koeien&Kansen' (Aarts, 2000). Zeventien praktijkbedrijven vormen het hart van dit project en zullen versneld de normen die de overheid heeft gesteld gaan realiseren volgens de 'De Marke'-strategie. Elk bedrijf is wat betreft regio, grondsoort en intensiteit representatief voor een deel van de Nederlandse melkveehouderij waardoor er voor de meeste melkveehouders wel een herkenbaar bedrijf te vinden is. Bedrijven zijn niet alleen object van onderzoek maar ook onderzoekspartner, met inbreng van ervaring, kennis en visie. De bedrijven krijgen een belangrijke functie op het gebied van kennisdoorstroming.
Het moederproject 'De Marke' wil zich intussen richten op de kennisbehoefte in de wat verdere toekomst. Het gaat vooral om een efficiënte integratie van natuur- en landschapsbeheer en grondwater- en energieproductie en om de daarvoor noodzakelijke milieukwaliteit. 'De Marke' wil als het ware een fase voorlopen op de bedrijven in 'Koeien&Kansen', waar de kennis zal worden benut zodra de maatschappij wegen heeft gevonden om prestaties naar redelijkheid te belonen.

Samenvatting

De melkveehouderij moet passen bij de wensen van de samenleving met betrekking tot de groene ruimte. Daarom zullen problemen als vermesting en

verdroging moeten worden opgelost, met name in de zandgebieden. Het doel van dit artikel is duidelijk te maken dat dit voor een belangrijk deel kan door het beter benutten van meststoffen, voer en water. De resultaten van proefbedrijf 'De Marke' illustreren dit. In de periode 1994-1997 kon het gebruik van kunstmest met 71% (stikstof) en 100% (fosfaat) worden verminderd en de aankoop van voer met 58% beperkt, in vergelijking met een gangbare bedrijfsvoering. De berekende besparing op het waterverbruik van gewassen was 570 m^3 ha^{-1}. De vervluchtiging van ammoniak was 72% lager dan bij gangbare bedrijven (deels gemeten en deels berekend). Metingen van het RIVM wezen uit dat het nitraatgehalte in het bovenste grondwater binnen enkele jaren daalde van 200 mg l^{-1} naar 50 mg l^{-1} en daarna vrij constant bleef. De verbetering van de milieuprestaties ging gepaard met een verhoging van de kostprijs van melk met 4,8 cent per kg (modelmatig berekend). Als het bespaarde (grond)water wordt gebruikt voor de productie van leidingwater, en daardoor oppervlaktewater vervangt, lijken de meerkosten van het bedrijf te kunnen worden goedgemaakt door de besparingen op waterzuivering. De strategie wordt sinds kort ook toegepast op 17 praktijkbedrijven, die onderling sterk verschillen maar samen representatief zijn voor de Nederlandse melkveehouderij.

Literatuur

Aarts, H.F.M. & J.H. Van Gorp, 1989.

'Veranderingen binnen het melkveebedrijf als reactie op milieueisen.' Milieu *2: 55-60.*

Aarts, H.F.M. (ed.), 2000.

Met de praktijk als basis; keuze en uitgangspositie van bedrijven in 'Koeien&Kansen'. *'Koeien&Kansen' rapport nr 1, Lelystad (in voorbereiding).*

Aarts, H.F.M., 1996.

'De mineralisatie bepaald volgens de veldincubatiemethode.' In: M.J.D. Hack-ten Broeke en H.F.M. Aarts (red.). Integrale monitoring van stikstofstromen in bodem en gewas, resultaten van proefbedrijf 'De Marke'. *AB-DLO rapport nr 14, 37-55, Wageningen.*

Aarts, H.F.M., B. Habekotté & H. Van Keulen, 2000a.

'Efficiency of nitrogen (N) management in dairy farming system 'De Marke'.' Nutr. Cycl. Agroecosyst. *(in press).*

Aarts, H.F.M., B. Habekotté & H. Van Keulen, 2000b.
'Efficiency of phosphorus (P) management in dairy farming system 'De Marke'.' Nutr. Cycl. Agroecosyst. *(in press).*

Aarts, H.F.M., B. Habekotté & H. Van Keulen, 2000c.
'Groundwater recharge through optimised intensive dairy farms.' J. Environ. Qual. *(accepted).*

Aarts, H.F.M., B. Habekotté, G.J. Hilhorst, G.J. Koskamp, F.C. Van der Schans & C.K. de Vries, 1999.
'Efficient resource management in dairy farming on sandy soils.' Neth. J. Agric. Sci. *47: 153-167*

Aarts, H.F.M., E.E. Biewinga & H. Van Keulen, 1992.
'Dairy farming systems based on efficient nutrient management.' Neth. J. Agric. Sci. *40: 285-299.*

Baan Hofman, T., 1995.
'De betekenis van witte klaver in het grasland van 'De Marke''. In: H.F.M. Aarts (red.). Weide- en voederbouw op De Marke: op zoek naar de balans tussen produktie en emissie. *Rapport nr 12 'De Marke', 15-31, Hengelo.*

Baan Hofman, T., 1999.
De groei van gras en witte klaver op 'De Marke, bemest met kunstmest en runderdrijfmest. *Rapport nr 104 AB, Wageningen.*

Beldman, A.C.G. & H. Prins, 1999.
Analyse verschillen in mineralenoverschotten op gespecialiseerde melkveebedrijven (96/97). *Rapport 2.99.01 LEI-DLO, Den Haag.*

Biewinga, E.E., H.F.M. Aarts & R.A. Donker, 1992.
Melkveehouderij bij stringente milieunormen. *Rapport nr 1 'De Marke', Hengelo.*

Bouma, J., 1999.
'Ecologisering van de landbouw; van ideologische bevlogenheid naar implementatie'. Spil *159-160:31-35.*

Boumans, L.J.M. & D. Fraters, 1995.
'Kwaliteit van het bovenste grondwater van proefbedrijf De Marke.' In: H.F.M. Aarts (red.). Weide- en voederbouw op De marke: op zoek naar de balans tussen produktie en emissie. *Rapport nr 12 'De Marke', 45-63, Hengelo.*

CBS, 1998.
Mest- en mineralenproduktie 1997. *Statistisch Bulletin 37, 24/9/98. Centraal Bureau voor de Statistiek, Voorburg.*

Daatselaar, C.H.G., D.W. De Hoop, B.W. Zaalmink & T. De Haan, 1998.
'De Marke en haar streefwaarde voor bedrijfseconomie.' In: F. Mandersloot (red.).

Milieudoelen 'De Marke' in economisch perspectief. *Rapport nr 21 'De Marke', 10-25, Hengelo.*

De Haan, M.H.A., & F. Mandersloot, 1998.

'Economie van De Marke anno 1998'. In: F. Mandersloot (red.). Milieudoelen 'De Marke' in economisch perspectief. *Rapport 21 'De Marke', 45-63, Hengelo.*

Dekker, J.N.M. & T.E.M. Van Leeuwen, 1998.

'Voorstellen tot het formuleren van normen in de mestwetgeving: de strategie voor het ontwikkelen van verliesnormen.' Milieu *3: 134-143.*

Erisman, J.W., F.A.A.M. De Leeuw & R.M. Van Aalst, 1987.

Depositie van de voor verzuring in Nederland belangrijke componenten in de jaren 1980 t/m 1986. RIVM-rapport 228473001, Bilthoven.

Fraters, B., H.A.Vissenberg, L.M.J. Boumans, T. De Haan & D.W. De Hoop, 1997.

Resultaten van het monitoring programma bovenste grondwater landbouwbedrijven in de zandgebieden 1992-1995. *RIVM-rapport 714801014, Bilthoven.*

Hack-Ten Broeke, M.J.D. & H.F.M. Aarts (red.), 1996.

Integrale monitoring van stikstofstromen in bodem en gewas, resultaten van proefbedrijf 'De Marke'. *AB-DLO rapport nr 14, 37-55, Wageningen.*

Hack-Ten Broeke, M.J.D., A.G.T. Schut & J. Bouma, 1999.

'Effects on nitrate leaching and yield potential of implementing newly developed sustainable land use systems for dairy farming on sandy soils in the Netherlands.' Geoderma *91: 217-235.*

Heij, G.J. & J.W. Erisman (eds.), 1997.

Acid atmospheric deposition and its effects on terrestial ecosystems in the Netherlands; the third and final phase (1991-1995). *Studies in Environmental Science 69. Elsevier, Amsterdam.*

LTO, 1997.

Uitzicht op een veelzijdige toekomst. *Nota LTO-Nederland nr. 630\631\N975642a.EHO, Den Haag.*

Noorduyn, L., 2000.

'Wisconson wil succesvolle aanpak 'De Marke' overnemen; buitenlanders in de rij voor samenwerking met melkveeproefbedrijf.' Weekblad voor Wageningen UR, *4: 6.*

Oenema, O. & C.W.J. Roest, 1998.

'Nitrogen and phosphorus losses from agriculture into surface waters; the effects of policies and measures in the Netherlands.' Wat. Sci. Tech. *37: 19-30.*

Oenema, O., P.C.M. Boers, M.M. Van Eerdt, B. Fraters, H.G. Van der Meer, C.W.J. Roest, J.J. Schröder & W.J. Willems, 1998.

'Leaching of nitrate from agriculture to groundwater: the effect of policies and measures in

the Netherlands.' In: K.W. van der Hoek e.a. *(ed.).* Proc. 1st Intern. Nitrogen Conf., *471-478, Noordwijkerhout, The Netherlands.*

Van der Molen, D.T., A. Breeuwsma & P.C.M. Boers, 1998.
'Agricultural nutrient losses to surface water in the Netherlands: impact, strategies and perspectives.' J. Environ. Qual. *27: 4-11.*

Van Es, A.J.H., 1978.
'Feed evaluation for ruminants. I. The system in use from May 1978 onwards in The Netherlands'. Livestock Production Science *5: 331-345.*

Velthof, G. L. & O. Oenema, 1997.
'Nitrous oxide emission from dairy farming systems in the Netherlands.' Neth. J. Agric. Sci. *45: 347-360.*

VROM, 1989.
Nationaal Milieubeleidsplan. *Tweede Kamer 1989-1990, 21 137, nr.1-2 Ministerie van Volkshuisvesting, Ruimtelijke Ordening en Milieubeheer. Staatsuitgeverij, Den Haag.*

Curriculum vitae

Henri Franciscus Martinus Aarts werd in 1951 geboren in Deurne. Na het behalen van het HBS-diploma studeerde hij Landbouwplantenteelt aan de Landbouwhogeschool, met Grasland-ecologie als specialisatie. Stage werd gelopen bij het Proefstation voor de Rundveehouderij en bij het 'Laboratoire d'écologie des prairies', te Michamps (nabij Bastogne). Na afstuderen, in 1976, werd korte tijd les gegeven aan de middelbare agrarische school in Boxtel. Daarna volgde een aanstelling bij het Proefstation voor de Akkerbouw en de Groenteteelt in de Vollegrond, te Lelystad. De eerste jaren werd onderzoek gedaan naar mogelijkheden voor minder milieubelastende onkruidbestrijding, later werd het onderzoek bedrijfsbreed. In 1987 werd overgestapt naar het Centrum voor Agrobiologisch Onderzoek (CABO, later via AB-DLO en AB opgegaan in Plant Research International), om onderzoek te doen naar maatschappelijk verantwoorde bedrijfssystemen voor de melkveehouderij. Dat heeft geleid tot dit proefschrift.

Frans Aarts is mede-oprichter en oud-voorzitter van de Nederlandse Vereniging voor Informatici werkzaam in de Agrarische Sector (VIAS) en oud voorzitter van de Nederlandse Vereniging voor Weide- en Voederbouw (NVWV). Tijdens een bezoek van de NVWV aan 'De Marke' is de vakterm 'siësta-beweiding' geïntroduceerd.

Als voorzitter van het organiserend comité was hij betrokken bij de organisatie van de '15th General Meeting of the European Grassland Federation', die in juni 1994 in Wageningen werd gehouden. Namens de Commissie voor de Milieueffectrapportage neemt hij deel aan het opstellen van richtlijnen voor landinrichtingsplannen en aan het toetsen van de plannen aan doelen en richtlijnen.

'De Marke' rapporten

Nr. 1 Melkveehouderij bij stringente milieunormen - Bedrijfs- en onderzoeksplan van het Proefbedrijf voor Melkveehouderij en Milieu. 1992.

E.E. Biewinga (CLM), H.F.M. Aarts (CABO-DLO), R.A. Donker (PR)

Nr. 2 Een verkenning van bodemeigenschappen en gewasproductie op de locatie van het Proefbedrijf voor Melkveehouderij en Milieu.

Intern CABO-DLO-verslag. 1990.

J. Boland (CABO-DLO)

Nr. 3 Technische mogelijkheden voor de teelt van voedergewassen ten behoeve van rundvee. CABO-DLO-verslag 131. 1990.

H.F.M. Aarts (CABO-DLO)

Nr. 4 De bodemgesteldheid van het Proefbedrijf voor Melkveehouderij en Milieu te Hengelo (Gld.): resultaten van een bodemgeografisch onderzoek.

SC-DLO-rapport 66. 1992.

J.M.J. Dekkers (SC-DLO)

Nr. 5 Gewasbeschermingsplan van het Proefbedrijf voor Melkveehouderij en Milieu.

CLM-notitie 75. 1991.

A.W. Wesselo (CLM)

Nr. 6 Energieplan van het Proefbedrijf voor Melkveehouderij en Milieu.

CLM-notitie 76. 1991.

J.A.M. van Bergen (CLM)

Nr. 7 Natuurplan van het Proefbedrijf voor Melkveehouderij en Milieu.

CLM-notitie 77. 1991.

A.G. van Paassen, E.E. Biewinga (CLM)

Nr. 8 Verslag van experimenteel onderzoek aan grasland, maïs en voederbieten, in 1990 uitgevoerd op 'De Marke', Proefbedrijf voor Melkveehouderij en Milieu te Hengelo (Gld.). CABO-DLO-verslag 159. 1992.

T. Baan Hofman, L. ten Holte (CABO-DLO)

Nr. 9 Verklaring van de variabiliteit van nitraatconcentraties op 1 m - mv. onder beweid grasland door simulatie.

SC-DLO-rapport 243. 1993.

J.P. Dijkstra, M.J.D. Hack-ten Broeke, W.J.M. de Groot, W.J.M. van der Voort (SC-DLO)

Nr. 10 Tussenbalans 1992-1994. Proefbedrijf voor Melkveehouderij en Milieu. 1994.

F. Aarts (AB-DLO), M. Hack (SC-DLO), G. Hilhorst, (De Marke), F. Mandersloot (PR), A. Meijer (PR), N. Middelkoop (CLM), C. de Vries (De Marke), W. Zaalmink (LEI-DLO)

Nr. 11 Veldproeven met gras, klaver, maïs en voederbieten. Onderzoek op De Marke in 1991. 1995.

T. Baan Hofman, L. ten Holte (AB-DLO)

Nr. 12 Weide- en voederbouw op De Marke: op zoek naar de balans tussen productie en emissie. 1995.

G.J. Hilhorst (De Marke), T. Baan Hofman (AB-DLO), M.J.D. Hack-ten Broeke (SC-DLO), W.J.M. de Groot (SC-DLO), L. Boumans (RIVM-LBG), D. Fraters (RIVM-LBG), H.F.M. Aarts (AB-DLO), C. de Vries (De Marke)

Nr. 13 Evaluatierapport 1e fase project De Marke. De ontwikkeling van een bedrijfssysteem voor rendabele melkveehouderij op zandgrond binnen stringente milieunormen. 1996.

H.F.M. Aarts (AB-DLO), E.E. Biewinga (CLM), A.B. Meijer (PR)

Nr. 14 Integrale monitoring van stikstofstromen in bodem en gewas. 1996.

M.J.D. Hack-ten Broeke (SC-DLO), H.F.M. Aarts (AB-DLO), W.J.M. de Groot (SC-DLO), W.J.M. van der Voort (SC-DLO), J. Hassink (AB-DLO), W.J. Corré (AB-DLO)

Nr. 15 Milieuverantwoorde melkveehouderij op lichte zandgrond bij een gangbaar melkquotum. Technische resultaten in 1993/94 en 1994/95. 1996.

H.F.M. Aarts (AB-DLO)

Nr. 16 Bemestingsonderzoek aan maïs en voederbieten op De Marke (1990-1995). 1996.

J.J. Schröder, L. ten Holte (AB-DLO)

Nr. 17 De invloed van milieumaatregelen op het bedrijfsresultaat van proefbedrijf De Marke; een modelstudie. 1996.

I. van Deurzen, P. Berentsen, G. Giesen (LUW)

Nr. 18 Efficient nutrient management in dairy farming on sandy soils; Technical results of the experimental farm 'De Marke' for the years 1993/94 and 1994/95. 1996.

H.F.M. Aarts (AB-DLO)

Nr. 19 Duurzame melkveehouderij. Doelstellingen, bedrijf en onderzoek in de tweede fase van De Marke. 1996.

E.E. Biewinga (CLM), H.F.M. Aarts (AB-DLO), G.J. Hilhorst (De Marke), F.C. van der Schans (PR), C.K. de Vries (De Marke)

Nr. 20 Agrarische natuur op zand. Een natuurplan voor De Marke. 1997.

J.A. Guldemond (CLM), M.J.M. Oomes (AB-DLO), R.H.E.M. Geerts (AB-DLO), N. Middelkoop (CLM)

Nr. 21 Milieudoelen De Marke in economisch perspectief. Bedrijfseconomische resultaten 1992/93-1996/97 en milieukosten De Marke anno 1998. 1998.

F. Mandersloot (PR), J. van Assen (LUW-ABE), P.B.M. Berentsen (LUW-ABE), C.H.G. Daatselaar (LEI-DLO), G.W.J. Giessen (LUW-ABE), M.H.A. de Haan (PR), D.W. de Hoop (LEI-DLO)

Nr. 22 Duurzame melkveehouderij en fosfaatmanagement. Recente (1990-1997) en te verwachten resultaten van Proefbedrijf De Marke en de betekenis voor praktijkbedrijven. 1998.

B. Habekotté (AB-DLO), H.F.M. Aarts (AB-DLO), W.J. Corré (AB-DLO), G.J. Hilhorst (De Marke), H. van Keulen (AB-DLO), J.J. Schröder (AB-DLO), O.F. Schoumans (SC-DLO), F.C. van der Schans (PR)

Nr. 23 Natuurplan Markeplas. 1999.

N. Middelkoop, J.A. Guldemond (CLM)

Nr. 24 Ammoniakemissie op De Marke: Overzicht en perspectieven. 1999.

F. van der Schans (PR), G.J. Hilhorst (De Marke), N. Middelkoop (CLM), E. Biewinga (CLM), T. van der Putten (AB-DLO), J. Ketelaars (AB-DLO)

Nr. 25 Economiemaatregelen "De Marke" anno 1999. 2000

M.H.A. de Haan (PR)

Foto's

De foto's voorin geven een indruk van de werkzaamheden in project 'De Marke' aan het einde van de vorige eeuw. Op één van de twee kleinere foto's wordt grondwater verzameld om het nitraatgehalte te kunnen vaststellen. Op de andere foto wordt kritisch gekeken naar luzerne, dat mogelijk een alternatief vormt voor de gewassen die op het proefbedrijf worden geteeld. De groepsfoto is genomen tijdens een discussiedag over de betekenis van de onderzoeksresultaten: hoe kan het bedrijf nog efficiënter omgaan met z'n hulpbronnen?
De foto's hiernaast geven een beeld van onderzoek en voorlichting aan het begin van de vorige eeuw. Op één van de twee kleinere foto's zijn de resultaten van een bemestingsproef met voederbieten vastgelegd (met in de deuropening P. Aarts, de grootvader van de auteur). De foto is genomen in 1908. Op de andere foto, uit 1934, wordt een graanproef geoogst (met M. Aarts, de vader van de auteur, als tweede van links). De proef was aangelegd op het proefveld van de R.K. Jonge Boerenstand. De groepsfoto is genomen rond 1927 (met M. Aarts als zesde van links op de op één na laatste rij). Pastoor Roes (midden eerste rij) gaf jonge boeren onderricht in het efficiënt gebruik van hulpbronnen en besprak proefveldresultaten met hen.

Photographs

Photographs in front of this thesis illustrate the activities in project 'De Marke' at the end of last century. One of the photographs shows collection of groundwater, for nitrate analyses. On the other one, lucerne is critically evaluated as a possible alternative crop for goal achievement at 'De Marke'. The group photo has been taken during a meeting of scientists, farmers and policy makers, discussing results of research: how can resource use efficiency be further improved?
Photograps on the right illustrate research and extension at the beginning of last century. One of the photographs shows the results of a field experiment with fodder beets, fertilised at different levels, conducted in 1908 (in the doorway the grandfather of the author, P. Aarts). On the other one a field experiment with cereals is harvested (second from the left, M. Aarts, the father of the author). The experiment was conducted in 1934 by the Young Farmers Union. The group photo has been taken in 1927 (third row, sixth from the left: M.Aarts). Priest Roes (middle of front row) is teaching young farmers how to use resources more profitable, by discussing results of research.